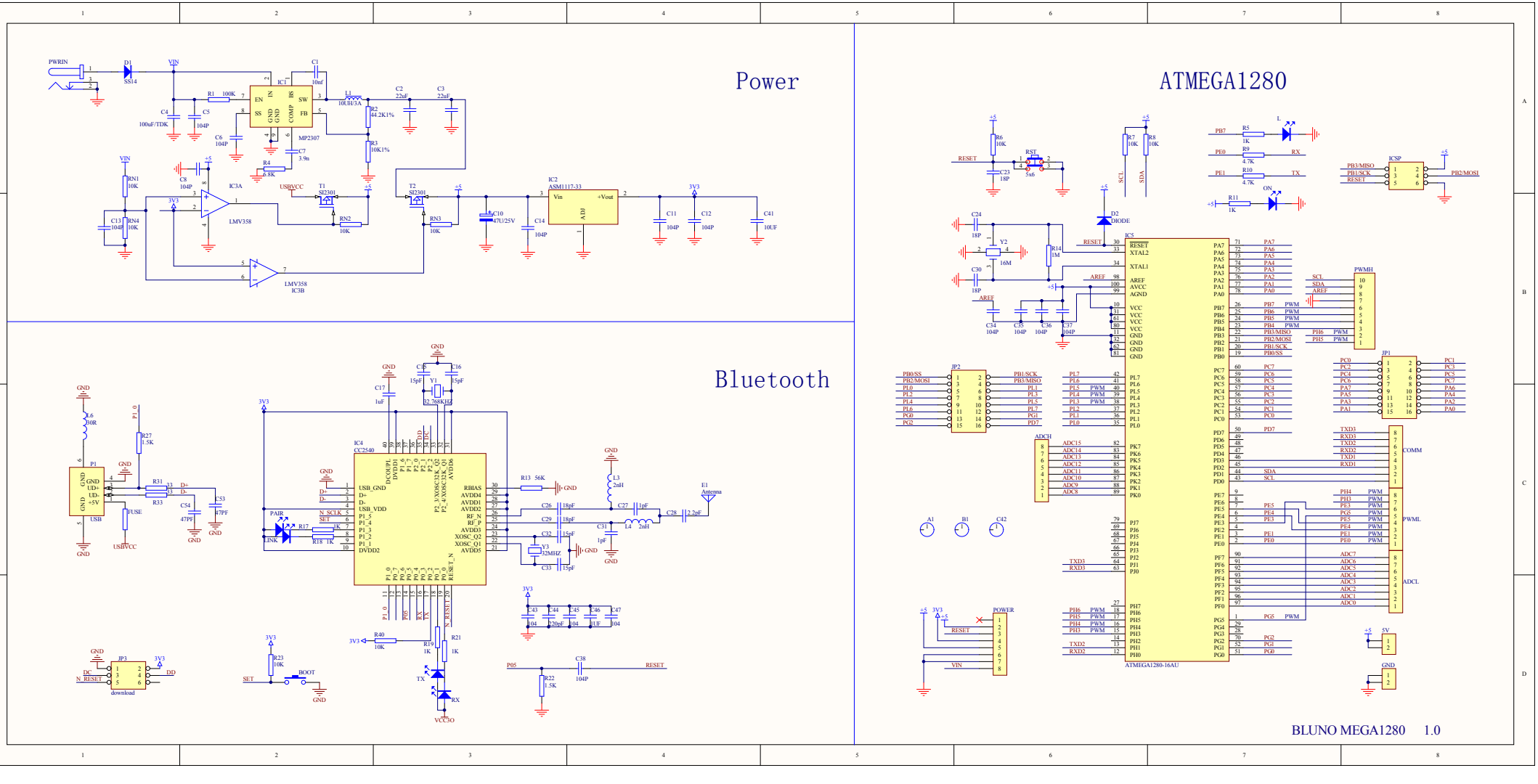
Power
ATMEGA1280
Bluetooth
BLUNO MEGA1280 1.0