Bambu Lab R1

User Manual

Bambu Lab R1 55 W CO_2 laser cutter and engraver (model LM001-P)

Read this entire manual before using the product,
in particular Chapter 2 “Safety”.

Note: Do not connect to the power supply until assembly is complete.

Product	Enclosed 55 W CO_2 laser cutter and engraver (Class 1 laser product)
Brand / manufacturer	Bambu Lab - Shenzhen Tuozhu Technology Co., Ltd. (details - Chapter 18)
Model / type	Bambu Lab R1, model LM001-P (per the manufacturer's EU Declaration of Conformity)
HW / firmware version	Available in the device menu
Botland SKU	BML-29690
Importer into the EU	BambuLab GmbH, Frankfurt am Main, Germany (seller: Botland)
Document no. / version / date	BL-INS-BML-29690-EN / v03.0 / 2026-11-25
Document status	Part A - Botland supplementary manual (safety, technical and legal information). Part B - manufacturer's original documents: Quick Start Guide (EN) and “Disclaimer and Safety Guidelines” (English section).

Keep this manual for the entire service life of the product and pass it on to any subsequent user together with the device.

The product is intended for use within the parameter ranges specified by the manufacturer and should be used only by qualified personnel trained in the operation of this product. Before each use, inspect the product for damage and do not use it if any defects are found. Failure to follow the manufacturer's guidelines may result in potential damage to the product.

© Botland B. Derkacz Sp. K. Copying, modifying or distributing this document in whole or in part without written consent is prohibited.
ID: BL-BML-29690-EN-0325112026-B3F73AD8

1. Contents and symbols used

Part A - Botland supplementary manual

1. Contents and symbols used 2
2. Safety 2
3. Intended use and limitations 5
4. Residual risks 5
5. Symbols and pictograms 5
6. Package contents, unpacking, inspection 6
7. Technical data and identification 7
8. Radio module, account and updates 7
9. Transport and storage 8
10. Installation - site requirements 8
11. First start-up - checklist 9
12. Operation - safe working rules 9
13. Emergencies 10
14. Maintenance and cleaning 10
15. Troubleshooting 11
16. Disposal 11
17. Compliance information 11
18. Contact details 12
19. Document details 12
Part B - Manufacturer's original documents 13

Signal words used in this manual

Word	Meaning
DANGER	Imminent hazard - ignoring it will result in death or serious injury (e.g. permanent eye damage).
WARNING	Potential hazard - ignoring it may result in death or serious injury.
CAUTION	Potential hazard - ignoring it may result in minor or moderate injury.
NOTICE	Risk of damage to the product, material or property; important information.

This manual quotes the manufacturer's requirements. Where Botland recommends additional measures, this is stated explicitly.

2. Safety

2.1. CO_2 laser - invisible high-power beam

The Bambu Lab R1 uses a 55 W CO_2 laser with a wavelength of 9-11 µm (far infrared). The beam is completely invisible. This radiation is absorbed by the cornea and skin and causes thermal burns - corneal damage may be irreversible. Both direct exposure to the beam and its reflection are hazardous.

Configuration	Laser product class (per manufacturer)	What it means
R1 standalone, lid closed, interlocks working	Class 1 (Class 4 laser in an enclosure with lid interlock)	Safe under reasonably foreseeable operating conditions. Do not open covers or bypass interlocks.
R1 with Riser Base or Conveyor	Class 4	The enclosure is not complete. CO_2 laser safety glasses, a designated area and professional use by trained personnel only are required (sections 2.5, 12).
Embedded source (55 W CO_2 tube) with covers removed	Class 4	Service only - device disconnected from the power supply.

Classification per manufacturer, standard EN 60825-1:2014+A11:2021 (EU Declaration of Conformity and “Disclaimer and Safety Guidelines”). Manufacturer label: CLASS 1 LASER PRODUCT; accessible emission < 1 mW; wavelengths 9000-11 000 nm (CO_2), 650 nm ± 10 nm (red aiming laser) and 450 nm ± 5 nm (blue distance-measuring laser).

© Botland B. Derkacz Sp. K. Copying, modifying or distributing this document in whole or in part without written consent is prohibited.
ID: BL-BML-29690-EN-0325112026-B3F73AD8

⚠ DANGER

Invisible Class 4 laser radiation inside the enclosure. Never put your hands or reflective objects into the beam path. Do not operate the laser with the lid open, covers removed, base tray removed, safety key removed or a faulty emergency stop button. Do not bridge or disable interlocks. Do not look into the laser aperture while the device is powered.

2.2. Who may operate the device

- Manufacturer: the device may only be operated by persons who have read the laser safety instructions or completed training (full training materials: wiki.bambulab.com/r1). Untrained persons must not operate the device.
- The product is not intended for use by children. Install and store it out of the reach of children; keep children, animals and bystanders away from the device during operation.
- Store the safety key so that unauthorised persons cannot start the laser (removing the key disables the laser).
- Do not operate the device under the influence of alcohol or medication that impairs your abilities, or when tired.

2.3. Supervision and fire protection

- The device must be under the direct supervision of a person on site at all times during operation - also for jobs started remotely (Bambu Handy, Bambu Suite). Never leave the device unattended while it is running.
- Keep a working fire extinguisher suitable for electrical equipment (e.g. CO_2) nearby. The manufacturer also recommends an automatic extinguishing system (Auto Fire Extinguishing System, sold separately).
- Do not use water to extinguish a fire in the device - it contains a high-voltage power supply.
- Keep flammable and volatile substances (alcohol, petrol, solvents, loose paper) away from the device and the exhaust system; Botland recommends a distance of at least 1 m.
- Regularly remove dust, debris and offcuts from the chamber, base tray and exhaust path - accumulated debris increases the risk of fire.
- The R1 has flame sensors (7 pcs). The sensors do not replace human supervision.

2.4. Fumes and gases - ventilation

Cutting and engraving produce fumes, dust and gases that may be harmful, irritating or corrosive, depending on the material.

- Always install the complete exhaust system: smoke exhaust fan, ventilation hose and connectors. Route the end of the hose outside the building (so that smoke does not enter windows or air intakes) or connect the Bambu Lab E1 Pro Air Purifier (sold separately).
- Room ventilation alone (an open window) does not replace exhaust from the device.
- If you notice smoke or an unusual smell, stop work, check the exhaust system and fix the fault before resuming.
- Comply with local regulations on emissions and environmental protection.

2.5. Personal protective equipment (PPE)

- In the Class 4 configuration (Riser Base, Conveyor), every person in the work area must wear CO_2 laser safety glasses compliant with EN 207, marked for protection at 10 600 nm (range 9-11 µm). Select the protection level (LB) for a 55 W continuous-wave CO_2 laser - if in doubt, consult the eyewear supplier.
- Ordinary glasses and glasses for blue (455 nm) or green lasers do not protect against CO_2 radiation.
- Safety glasses do not replace covers - the closed enclosure is the primary protection.
- Wear protective gloves when cleaning the chamber and optics, and a dust mask when removing dust.
- Do not stare at the processing area through the lid window for long periods (manufacturer). If your eyes feel uncomfortable, stop watching and rest.

2.6. Permitted and prohibited materials

© Botland B. Derkacz Sp. K. Copying, modifying or distributing this document in whole or in part without written consent is prohibited.
ID: BL-BML-29690-EN-0325112026-B3F73AD8

Type	Materials
Cutting and engraving	wood (plywood), acrylic (PMMA, including clear), leather, fabrics, paper, EVA foam, shell sheets
Engraving only	coated metal (uncoated metal cannot be engraved), glass, ceramics
PROHIBITED - toxic gases	PVC (including foamed), vinyl and PVC artificial leather, other chlorinated plastics, PTFE (Teflon); materials containing bromine (e.g. FR-4 laminates), glass fibre and epoxy resin composites
PROHIBITED - reflective	uncoated metals and mirror surfaces (a reflected beam may damage the device or cause injury)
PROHIBITED - unknown	materials of unknown composition - check the composition before processing (safety data sheet, material manufacturer information); if in doubt, contact technical support

Manufacturer: use only materials and parameters recommended by Bambu Lab or verified as compatible with the product. Material list: wiki.bambulab.com → R1 Processable Materials List.

⚠ WARNING

Processing PVC and other chlorinated plastics releases chlorine and hydrogen chloride - corrosive and toxic gases that also damage device components. Incorrect parameters may cause glass to crack.

2.7. Electrical safety and cooling

- Connect the device only to a properly installed mains socket with a protective earth conductor. Do not use multi-plug adapters, power strips or extension cords (manufacturer).
- Switch off the device and disconnect the power cord before assembly, cleaning, inspection and maintenance.
- Do not touch the switch, the cord or electrical parts with wet hands; do not operate the device barefoot.
- The laser tube power supply operates at high voltage - work on the power supply, tube and electrodes must be performed by service personnel only.
- The laser is liquid-cooled. Use only distilled water (not tap or mineral water) and - if the temperature may drop below 5 °C - antifreeze at the concentration specified by the manufacturer (section 10.4). Do not put your hands into the tank.
- Never use the device at temperatures below 5 °C - this may cause irreversible damage and a serious hazard (manufacturer).
- Do not cover the radiator grille or air inlets and outlets.

2.8. Optical components

- The beam travels through a mirror system with free-air sections. Do not use the device with a damaged enclosure, mirrors, covers or other beam path components - contact service.
- Clean the mirrors and lens only after disconnecting the power and allowing them to cool, using a damp cloth in one direction; do not wipe dry or with a back-and-forth motion (manufacturer).
- The focusing lens may contain zinc selenide (ZnSe) - a brittle and harmful material. Do not dispose of fragments with household waste; wash your hands after contact.

2.9. Prohibited actions

- operating the laser with the lid open, covers removed, without the base tray, or with the interlock, safety key or emergency stop bypassed;
- leaving the device unattended while it is running;
- processing prohibited materials (section 2.6) or materials of unknown composition;
- operating without an exhaust system or with a faulty exhaust;
- operating without coolant, with tap water, during a cooling alarm or at temperatures below 5 °C;
- disassembly, modifications and changes of use without the approval of Bambu Lab service;
- directing the beam (including a reflected beam) at people or animals;
- operation by children and untrained persons.

© Botland B. Derkacz Sp. K. Copying, modifying or distributing this document in whole or in part without written consent is prohibited.
ID: BL-BML-29690-EN-0325112026-B3F73AD8

3. Intended use and limitations

The Bambu Lab R1 is a stationary 55 W CO_2 laser cutter and engraver in a closed enclosure, intended for cutting and engraving the materials listed in section 2.6 in dry indoor rooms - in studios, workshops, schools and small businesses. The device is operated from the touchscreen, from Bambu Suite (Windows, macOS) and from the Bambu Handy app. Recommended operating temperature per manufacturer: 10-30 °C.

Foreseeable misuse (prohibited)

- operating with the lid open or in the Class 4 configuration without safety glasses and without a designated area;
- processing uncoated metals, mirror surfaces, PVC, PTFE and other prohibited materials;
- processing objects taller than the device allows (up to 57 mm standalone);
- outdoor use, use in damp conditions, with condensation or frost, or at temperatures below 5 °C;
- using the device for heating, drying, or medical or cosmetic purposes;
- operating without effective exhaust of fumes to the outside or without a purifier.

4. Residual risks

Despite the built-in safety features, some hazards cannot be completely eliminated:

Hazard	When it occurs	How to protect yourself
Eye or skin burns from the CO_2 beam (direct or reflected)	Class 4 configuration, damaged lid or interlock, service	do not bypass interlocks; EN 207 glasses for 10 600 nm in the Class 4 configuration; replace a damaged lid before use
Ignition of material, fire	excessive power / low speed, dirty chamber, flammable material	constant supervision, chamber cleaning, fire extinguisher, emergency stop
Toxic fumes and gases	any processing, especially of unknown materials	working exhaust to the outside or purifier, permitted materials only
High-voltage electric shock	access to the power supply or tube, damaged cord	do not open the enclosure, service only with power disconnected
Tube breakage, coolant leakage	no coolant, freezing, overheating	distilled water, antifreeze, respond to alarms
Hot parts, sharp material edges	immediately after processing	wait, wear gloves when removing
Moving parts (laser head, fan, conveyor)	operation, calibration	do not reach inside while parts are moving; emergency stop
Cracking of glass or ceramics	incorrect parameters	parameters from the material library, test on a scrap piece

5. Symbols and pictograms

The following symbols may appear on the product, the rating plate and the packaging:

© Botland B. Derkacz Sp. K. Copying, modifying or distributing this document in whole or in part without written consent is prohibited.
ID: BL-BML-29690-EN-0325112026-B3F73AD8

Symbol / marking	Meaning
CE	The manufacturer declares compliance with the requirements of EU legislation (Chapter 17).
Crossed-out wheeled bin (WEEE)	Do not dispose of with household waste - take to a WEEE collection point (Chapter 16).
CLASS 1 LASER PRODUCT	Class 1 laser product per EN 60825-1 (in the standalone configuration, with the enclosure closed).
Triangle with beam symbol (ISO 7010 W004), LASER APERTURE	Warning of laser radiation; laser exit aperture.
CAUTION! DANGER ELECTRIC SHOCK (ISO 7010 W012)	Risk of electric shock.
CAUTION HOT! DO NOT TOUCH (ISO 7010 W017)	Hot surface - do not touch.
KEEP CLEAR OF MOVING PARTS / FAN BLADE	Keep away from moving parts and fan blades.
Fill Line, temperature marks on the tank	Distilled water fill level; antifreeze levels for a given minimum temperature.
“Read the manual” symbol	Read the manual before use.

Certification information (e-label): on the device screen, Settings → Regulation Certification.

6. Package contents, unpacking, inspection

No.	Item	No.	Item
1	Power cord*	8	Laser Alignment Sensor
2	Ventilation hose (smoke exhaust)*	9	Material Pin
3	Smoke exhaust fan*	10	Calibration plate
4	Antifreeze*	11	Rail grease
5	Funnel*	12	Linear rail oil
6	H2.0 Allen key*	13	Clear acrylic (sample)
7	Safety key (pre-installed)*	14	Basswood plywood (sample)

* items needed for the initial installation. Also prepare approx. 1500 ml of distilled water. List per the Quick Start Guide (Part B).

- The device weighs approx. 33.5 kg - two people are required to remove it from the packaging and carry it. Place it on a stable, level, non-flammable surface with adequate load capacity.
- Remove the film from the lid, open the lid, and take out the cushioning and the accessory box.
- Check that the set is complete and free of transport damage (cracked lid, damaged cord, traces of liquid). Do not start a damaged device - contact the seller.
- Keep the packaging, cushioning and transport locks - they are needed for transport (Chapter 9).

© Botland B. Derkacz Sp. K. Copying, modifying or distributing this document in whole or in part without written consent is prohibited.
ID: BL-BML-29690-EN-0325112026-B3F73AD8

7. Technical data and identification

Parameter	Value
Model (per DoC)	R1, model LM001-P
HW / firmware version	Available in the device menu
Serial number	on the rating plate and in the device menu
Laser type	55 W CO_2 laser, liquid-cooled; wavelength 9-11 µm
Auxiliary lasers	red aiming laser 650 nm ± 10 nm; blue distance-measuring laser 450 nm ± 5 nm
Laser product class	Class 1 (standalone); Class 4 with Riser Base or Conveyor (section 2.1)
Power supply	100-240 V AC, 50/60 Hz
Max. input power	780 W
Working area	standalone 600 × 300 mm; with Conveyor (separate) 600 × 3000 mm
Max. material size	standalone 710 × 380 mm; with Conveyor up to 610 mm wide
Max. speed / acceleration	1000 mm/s / 20 000 mm/s²
Spot diameter	short-focus lens Ø 0.11 mm; medium-focus Ø 0.17 mm; long-focus Ø 0.19 mm
Max. cutting thickness	short-focus: plywood (walnut) 15 mm / acrylic 20 mm; medium- and long-focus: 18 mm / 20 mm
Positioning	2 cameras + 2 lasers + 2 encoders; positioning accuracy < 0.2 mm; motion accuracy < 0.1 mm over 600 mm
Air assist	built-in pump 30 l/min at 30 kPa
Safety features	lid-open interlock, flame sensors, safety key, emergency stop button; automatic extinguishing with the Auto Fire Extinguishing System accessory (separate)
Connectivity	dual-band Wi-Fi (IEEE 802.11 a/b/g/n/ac/ax), USB-C (Chapter 8)
Operating temperature	recommended 10-30 °C; never below 5 °C
Operating humidity	20-70 % RH, non-condensing
Storage conditions	5-35 °C (manufacturer), 20-80 % RH non-condensing, away from sunlight and dust
Ingress protection (IP) / protection class	No manufacturer data available; device intended for connection to a socket with a protective earth conductor
Device dimensions	940 × 560 × 200 mm (manufacturer); space with lid open: 940 × 660 × 650 mm, with Riser Base height 850 mm
Packaging dimensions	1095 × 725 × 310 mm
Net weight	approx. 33.5 kg
Coolant	distilled water approx. 1500 ml + antifreeze per the table in section 10.4
Software	Bambu Suite (Windows, macOS), Bambu Handy

Sources: bambulab.com/en/r1/specs, “Disclaimer and Safety Guidelines - R1” (D00296-04), R1 EU Declaration of Conformity (10.10.2026).

8. Radio module, account and updates

Parameter	Value (EU / CE)
Wi-Fi 2.4 GHz	2412-2472 MHz; max. EIRP < 20 dBm
Wi-Fi 5 GHz	5150-5850 MHz; max. EIRP: bands 1/2 < 23 dBm, band 3 < 30 dBm, band 4 < 14 dBm
Restriction	in the 5150-5350 MHz band the device may only be used indoors (all EU countries, including PL, CZ, DE)
Distance from the body	at least 20 cm from the antenna during operation (manufacturer)

- A Bambu Lab account is required to use the Bambu Handy app and Bambu Suite. The computer and the device must be on the same network (not a guest network with device isolation).
- Install firmware and software only from the manufacturer's official sources. After an update, check that the lid interlock and the emergency stop button work.

© Botland B. Derkacz Sp. K. Copying, modifying or distributing this document in whole or in part without written consent is prohibited.

- The device has cameras (BirdsEye camera in the lid, toolhead camera). The image is used for positioning and preview; make sure no people or confidential information are in the frame. Privacy settings - in the app and in the Bambu Lab account.
- Protect your Wi-Fi network with a password and do not share your account with unauthorised persons.

9. Transport and storage

- Transport the device in its original packaging, with the transport locks of the laser head and Y axis fitted, using two people (weight approx. 33.5 kg, packaging 1095 × 725 × 310 mm). Follow the “R1 Packing Guide” (wiki.bambulab.com).
- Before transport at low temperatures, drain the coolant or make sure that the antifreeze concentration matches the lowest expected temperature (sections 10.4, 14). Draining: switch off the power, remove the exhaust fan and its bracket, remove the cap, pull the drain tube out over a container and remove the plug; after draining, refit the plug and secure the tube in its holder (wiki: R1 Coolant Replacement Guide).
- Store in a dry, clean room at 5-35 °C (manufacturer), with the lid closed and the safety key removed, out of the reach of children.
- After storage for more than 30 days, carry out the same checks as before the first start-up (Chapter 11).

10. Installation - site requirements

⚠ WARNING

Do not connect the power supply until assembly is complete. Perform all assembly steps with the power cord disconnected.

10.1. Workstation

- Stable, level, non-flammable surface with a load capacity well above approx. 34 kg; dry, clean, well-ventilated room.
- Clearances per manufacturer: at least 10 cm on the left, right and top, at least 20 cm at the back (exhaust hose). Space required with the lid open and clearances: 1140 × 860 × 750 mm (with Riser Base height 950 mm).
- Ability to route the exhaust hose outside or space for a purifier; fire extinguisher within reach; flammable materials away from the device.
- Earthed wall socket nearby; free access to the emergency stop button and the plug.

10.2. Removing the transport locks

- Using the long H2.0 Allen key supplied, remove the 6 screws around the laser head and remove the laser head fixing bracket.
- Remove the screws from the Y-axis transport locks and remove the locks. Keep them for transport.

10.3. Installing the smoke exhaust

- Connect the 4-pin Bambu Bus cable of the exhaust fan to the 4-pin Bambu Bus port at the back of the device and route it in the cable channel.
- Place the fan against the exhaust port (alignment marks on the fan and the device) and turn it counterclockwise until it clicks.
- Slide the hose end with the connector over the fan outlet so that it fully covers the O-ring. Route the other end to a well-ventilated area outside or connect it to the E1 Pro purifier (connect its Bambu Bus cable to the EXPANSION port on the side of the device).

10.4. Filling the coolant

- Prepare approx. 1500 ml of distilled water. Do not use tap water, mineral water or contaminated water - it may seriously damage the laser tube.
- Remove the filler cap and insert the funnel. Do not put your fingers into the filler opening.
- Antifreeze: if the temperature at the installation site may drop below 5 °C, look at the tank straight on and pour antifreeze up to the mark corresponding to the lowest expected temperature. If the temperature

© Botland B. Derkacz Sp. K. Copying, modifying or distributing this document in whole or in part without written consent is prohibited.
ID: BL-BML-29690-EN-0325112026-B3F73AD8

never drops below 5 °C, do not add antifreeze.
- Top up with distilled water to the Fill Line mark.
- Connect the power cord to the wall socket and switch on the device. Wait approx. 30 s for the level in the tank to drop, then top up with water to the Fill Line again. Remove the funnel and refit the cap.

Lowest annual temperature at the installation site	**> 5 °C**	**5 to −10 °C**	**−10 to −20 °C**	**−20 to −30 °C**
Antifreeze concentration (by volume)	0 %	30 %	40 %	50 %

Table per the manufacturer's wiki (R1 Coolant Replacement Guide). The recommendations apply to temperatures not lower than −30 °C.

11. First start-up - checklist

✓	**Check before the first and every subsequent start-up**
☐	Lid and covers fitted and undamaged; base tray in place
☐	Safety key inserted; emergency stop button working and accessible (release: turn clockwise)
☐	Support slats correctly fitted; chamber clean, free of debris
☐	Coolant at the Fill Line, no alarms or leaks
☐	Mirrors and lens clean; flame sensors unobstructed
☐	Exhaust working, hose tightly fitted and routed outside / to the purifier
☐	Radiator grille, air inlets and outlets unobstructed
☐	Fire extinguisher within reach; no flammable materials nearby
☐	Permitted material (section 2.6), parameters set in Bambu Suite

- Download the Bambu Handy app, register and log in; follow the device screen until the QR code appears and scan it in the app.
- Install Bambu Suite (bambulab.com/download/suite), connect the computer and the device to the same network, click “+” on the project page and select the detected device.
- Perform the initial calibration as shown on the screen (including automatic laser alignment). Vibration and noise are normal. Run the calibration with the lid closed and under supervision.
- Run the first job on the material sample supplied, observing the device while it works.

12. Operation - safe working rules

- Place the material flat and stable on the support slats or the base tray; use the Material Pin if necessary.
- Prepare the design in Bambu Suite and select the parameters (power, speed, number of passes) for the material. Change parameters only when the laser is not operating.
- Close the lid and start the job with the Start/Pause button or from the software. The device measures the material height and sets the focus.
- Supervise the job at all times: material, screen, indicators, signs of ignition, unusual sounds and smells. Do not put your hands inside while the laser head is moving.
- Opening the lid stops the laser. Use the Start/Pause button to pause; in a hazardous situation use the emergency stop button.
- Flame sensor message or alarm on the screen: pause the job, check the cause, eliminate it after cooling down and only then resume the job.
- When the job is finished, wait until the fumes have been extracted and the parts have cooled down; only then open the lid and remove the material.
- After each job, remove debris and dust from the chamber and the tray.

⚠ DANGER

Operating with the Riser Base or Conveyor is a Class 4 configuration - the beam may escape from the device. Manufacturer: professional use by trained personnel only, CO_2 laser safety glasses. Designate and mark the work area and restrict access by bystanders. Follow the accessory documentation and labels.

© Botland B. Derkacz Sp. K. Copying, modifying or distributing this document in whole or in part without written consent is prohibited.
ID: BL-BML-29690-EN-0325112026-B3F73AD8

13. Emergencies

Step	Action in case of flame, open fire or heavy smoke
1	Stop work immediately and press the emergency stop button - it cuts off the power.
2	Disconnect the power cord if it is safe to do so.
3	Keep a safe distance. Use a suitable fire extinguisher only if it is safe to do so. Do not use water. If the flame goes out by itself, do not open the lid until the smoke has been extracted.
4	If the fire cannot be brought under control, leave the room and call for help (tel. 112).
5	Ventilate the room. Do not start the device until the cause has been eliminated and the device has been inspected (covers, optics, cables, cooling).

Switch off the device and disconnect the power immediately if:

- a cooling alarm (temperature, flow, level) or a coolant leak occurs;
- the lid, interlock or emergency stop button does not work correctly, or the optics are cracked;
- a power failure occurs - check the material and the device before restarting;
- any other unusual condition occurs whose cause you do not know.

Fumes, beam exposure

- Coughing, dizziness, difficulty breathing, eye irritation: stop work, go out into fresh air and seek medical help (manufacturer).
- If you suspect that the beam has hit your eye, see an ophthalmologist immediately, even if there are no symptoms. Cool skin burns with water.

14. Maintenance and cleaning

⚠ WARNING

Before maintenance, switch off the device, disconnect the power cord and wait for the parts to cool down. Do not open the power supply or the laser tube - work on the high-voltage system must be performed by service personnel only.

Task	Interval (manufacturer)	Who
Remove debris and dust from the chamber, base tray and support slats	after each job	user
Check flame sensors (7 pcs) - unobstructed and clean	before each job	user
Clean mirrors no. 2 and 3 (damp cloth, one direction)	every 8 h of operation or when visibly dirty	user
Clean the toolhead camera and the BirdsEye camera	every 8 h of operation or on a message / blurred image	user
Clean the focusing lens and the air assist nozzle	every 16 h of operation	user
Clean the exhaust fan and rinse the filter	every 20 h of operation or when visibly dirty	user
Clean and lubricate the X/Z rails and belt (grease, oil supplied)	every 50-100 h of operation	user
Check the positioning markers (left, right)	every 200 h of operation	user
Replace the coolant (drain, new coolant per the table in section 10.4)	every 6 months or when prompted by the device	user
Check the power cord, exhaust hose and legibility of labels	monthly	user
Replace cracked optics or the laser tube, work on the power supply	in case of a fault	service

Clean more often when processing materials that produce a lot of smoke (leather, acrylic, MDF). Details: wiki.bambulab.com → R1 Periodic Maintenance Recommendations. We recommend keeping a maintenance log (date, task, person).

© Botland B. Derkacz Sp. K. Copying, modifying or distributing this document in whole or in part without written consent is prohibited.
ID: BL-BML-29690-EN-0325112026-B3F73AD8

15. Troubleshooting

Symptom	Possible cause	Action
Coolant temperature / flow / level alarm	no coolant, air in the system, ambient temperature too high	switch off the device, top up distilled water to the Fill Line, check the room temperature; if it recurs - service
Laser does not start	lid open, key missing, emergency stop pressed, alarm	close the lid, insert the key, release the emergency stop (turn clockwise) after eliminating the cause, read the message
Weak cutting, uneven engraving	dirty lens or mirrors, wrong parameters, misaligned beam path	clean the optics, check the parameters, perform laser alignment calibration
Smoke outside the device, unusual smell	fan not working, leaking hose, clogged filter	stop work, check the fan, hose and filter
Job stopped - flame detected	excessive power / low speed, flammable material, dirty chamber	follow Chapter 13; clean the chamber, adjust the parameters
No connection to Bambu Suite / Handy	different network, guest network with device isolation	connect the computer and the device to the same network without isolation
Blurred camera image, incorrect positioning	dirty camera or markers	clean the cameras and positioning markers, perform vision calibration
Cracked lens or mirror, coolant leak, damaged lid	damage	do not use the device; contact service

Manufacturer technical support: wiki.bambulab.com, bambulab.com/support, ticket in Bambu Handy (Support Center) - attach logs and photos.

16. Disposal

- Do not dispose of the used device with household waste. Take it to a collection point for waste electrical and electronic equipment (WEEE) or return it to the seller when buying a new device of the same type. Separate collection protects the environment and health.
- Hand in batteries and accumulators (if present in accessories) separately at a battery collection point.
- Treat cracked optics as hazardous waste.
- Do not pour coolant containing antifreeze into the sewer or the ground - dispose of it in accordance with local regulations.
- Recycle the packaging according to the material markings.

17. Compliance information

The device bears the CE marking. The manufacturer declares compliance with (EU Declaration of Conformity dated 10.10.2026):

Legal act	Standards applied per DoC
Directive 2014/53/EU (RED)	Art. 3.1a: EN IEC 62311:2020, EN 62368-1:2014+A11:2017, EN 60825-1:2014+A11:2021; Art. 3.1b (EMC): EN 301 489-1 V2.2.3, EN 301 489-3 V2.3.2, EN 301 489-17 V3.3.1, EN 55032:2015+A11:2020, EN 55035:2017+A11:2020, EN IEC 61000-3-2:2019+A1:2021+A2:2024, EN 61000-3-3:2013+A1:2019+A2:2021; Art. 3.2: EN 300 328 V2.2.2, EN 301 893 V2.2.1, EN 300 440 V2.2.1; Art. 3.3 d), e): EN 18031-1:2024, EN 18031-2:2024
Machinery Directive 2006/42/EC	EN ISO 12100:2020, EN 60204-1:2018, EN ISO 13849-1:2023, EN ISO 14120:2015
RoHS Directive 2011/65/EU	EN IEC 63000:2018
Notified body (RED, Annex III)	SGS Fimko Ltd, no. 0598

From 20.01.2027, Directive 2006/42/EC is replaced by Regulation (EU) 2023/1230 on machinery. The product is made available in accordance with Regulation (EU) 2023/988 on general product safety (GPSR). The WEEE marking results from Directive 2012/19/EU.

© Botland B. Derkacz Sp. K. Copying, modifying or distributing this document in whole or in part without written consent is prohibited.
ID: BL-BML-29690-EN-0325112026-B3F73AD8

Simplified EU Declaration of Conformity: Hereby, Shenzhen Tuozhu Technology Co., Ltd. declares that the radio equipment type R1 is in compliance with Directive 2014/53/EU. The full text of the EU Declaration of Conformity is available at www.botland.store (product page BML-29690, documents section) and on the manufacturer's website: bambulab.com/en/euro-compliance.

18. Contact details

Role	Details
Manufacturer	Shenzhen Tuozhu Technology Co., Ltd., 401, West Zone, Hengchang Science and Technology Building, No. 2228 Linhai Avenue, Nanshan Street, Qianhai Shengang Cooperation Zone, Shenzhen, China (address per the EU Declaration of Conformity) e-mail: contact@bambulab.com · www.bambulab.com
Importer / responsible economic operator in the EU	BambuLab GmbH, 4th floor, Hanauer Landstraße 291b, 60314 Frankfurt am Main, Germany · e-mail: contact@bambulab.com · www.bambulab.com
Authorised representative in the EU	Not specified in the manufacturer's Declaration of Conformity. Responsible economic operator in the EU: importer BambuLab GmbH (see above).
Seller in Poland (distributor)	Botland B. Derkacz Sp. K., Gola 25A, 63-640 Bralin, Poland · tel. +48 62 593 10 54 · biuro@botland.com.pl · www.botland.store
Manufacturer technical support	wiki.bambulab.com · bambulab.com/support · Bambu Handy → Support Center
Complaints and incident reporting	seller: Botland - biuro@botland.com.pl, tel. +48 62 593 10 54

19. Document details

Field	Value
Document no.	BL-INS-BML-29690-EN
Version / date	v03.0 / 2026-11-25
Document identifier (tag)	BL-BML-29690-EN-0325112026-B3F73AD8
Prepared by	Botland B. Derkacz Sp. K. - Technical Support Department
Sources	Bambu Lab: “Bambu Lab R1 Quick Start Guide” (LM001-P), “Disclaimer and Safety Guidelines - R1” (D00296-04), specifications bambulab.com/en/r1/specs, wiki.bambulab.com/en/r1 (maintenance, coolant, materials), R1 EU Declaration of Conformity (10.10.2026); Botland product data (PrestaShop, GPSR)

Revision history

Version	Date	Change
v01.0	2026-11-06	First edition (standalone manual, PL only).
v02.0	2026-11-06	New layout per the Botland template (header, footer, document security features); data from the manufacturer's EU Declaration of Conformity and safety guidelines; technical, radio and maintenance data completed; manufacturer's original documents added (Part B); PL, CZ, DE, EN versions.
v03.0	2026-11-25	Botland as distributor; EU importer BambuLab GmbH; manufacturer e-mail; DoC link.

Operator safety quick card

Always	Never
• lid closed, key inserted, emergency stop accessible • smoke exhaust working • coolant OK, distilled water • fire extinguisher nearby, no flammable materials • supervision throughout the job • EN 207 glasses (10 600 nm) in the Class 4 configuration • clean the chamber after the job	• PVC, vinyl, PTFE, chlorinated materials and materials of unknown composition • uncoated and mirror metals • bypassing interlocks and removing covers • unattended operation • operation below 5 °C • extinguishing with water • operation by children and untrained persons

In an emergency: emergency stop → disconnect power → fire extinguisher (if safe) → ventilate / evacuate → 112.

© Botland B. Derkacz Sp. K. Copying, modifying or distributing this document in whole or in part without written consent is prohibited.

Part B - Manufacturer's original documents

B.1 - Bambu Lab R1 Quick Start Guide (original EN, 22 pages). B.2 - Bambu Lab R1 “Disclaimer and Safety Guidelines - R1” (D00296-04): cover and English section.

© Botland B. Derkacz Sp. K. Copying, modifying or distributing this document in whole or in part without written consent is prohibited.
ID: BL-BML-29690-EN-0325112026-B3F73AD8

Part B.1 - Manufacturer's Quick Start Guide (original), p. 1 of 22

LM001-P

Bambu Lab R1

Quick Start Guide

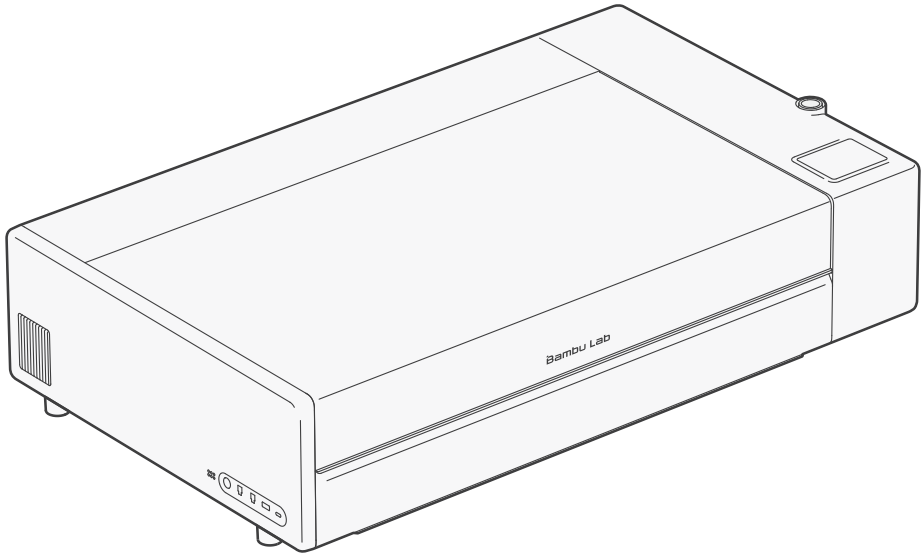

Please review the entire guide before using the product.

Safety notice: Do not connect to power until the assembly is complete.

© Botland B. Derkacz Sp. K. Copying, modifying or distributing this document in whole or in part without written consent is prohibited.
ID: BL-BML-29690-EN-0325112026-B3F73AD8

Part B.1 - Manufacturer's Quick Start Guide (original), p. 2 of 22

Video Guide
Watch a step-by-step video and get started quickly.
bambulab.com/r1-quick-start

Download Bambu Handy and Bambu Suite
Control your product and monitor task progress in real time on both your phone and computer.
bambulab.com/download

Explore More Cool Models
Visit MakerWorld, our models community, to find a variety of free models and bring your ideas to life using the creativity tools in Maker-Lab and accessories in Maker's Supply.
makerworld.com

Learn with Bambu Academy
Visit Bambu Academy and explore courses from beginner to advanced levels to enhance your laser engraving and cutting skills.
bambulab.com/academy

© Botland B. Derkacz Sp. K. Copying, modifying or distributing this document in whole or in part without written consent is prohibited.
ID: BL-BML-29690-EN-0325112026-B3F73AD8

Part B.1 - Manufacturer's Quick Start Guide (original), p. 3 of 22

Table of Contents

Included Accessories..... 1
Product Overview.....2
Unboxing Guide.....5
Install the Smoke Ventilation Accessories..... 8
Fill the Coolant..... 10
Bind the Device - Bambu Handy.....15
Bind the Device - Bambu Suite..... 16
Regular Maintenance.....17
Technical Support..... 18

© Botland B. Derkacz Sp. K. Copying, modifying or distributing this document in whole or in part without written consent is prohibited.

Part B.1 - Manufacturer's Quick Start Guide (original), p. 4 of 22

Included Accessories



1. Power Cord*

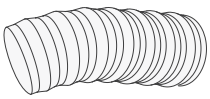

2. Smoke Ventilation Hose*

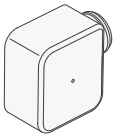

3. Smoke Ventilation Fan*



4. Anti-freeze*

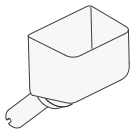

5. Funnel*

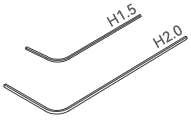

6. Allen Key*

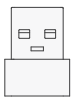

7. Safety Key (Pre-installed)*

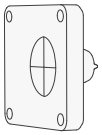

8. Laser Alignment Sensor

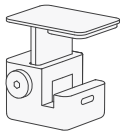

9. Material Pin

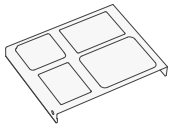

10. Calibration Board



11. Lubricant Grease



12. Lubricant Oil



13. Clear Acrylic



14. Basswood Plywood

- **Items marked with "*" are used for initial installation**. Scan the QR code to visit the official Wiki to view accessory descriptions.
- Before starting the installation, **prepare approximately 1500 mL of distilled water** (do not use tap water, mineral water, etc.).

1

© Botland B. Derkacz Sp. K. Copying, modifying or distributing this document in whole or in part without written consent is prohibited.
ID: BL-BML-29690-EN-0325112026-B3F73AD8

Part B.1 - Manufacturer's Quick Start Guide (original), p. 5 of 22

Product Overview

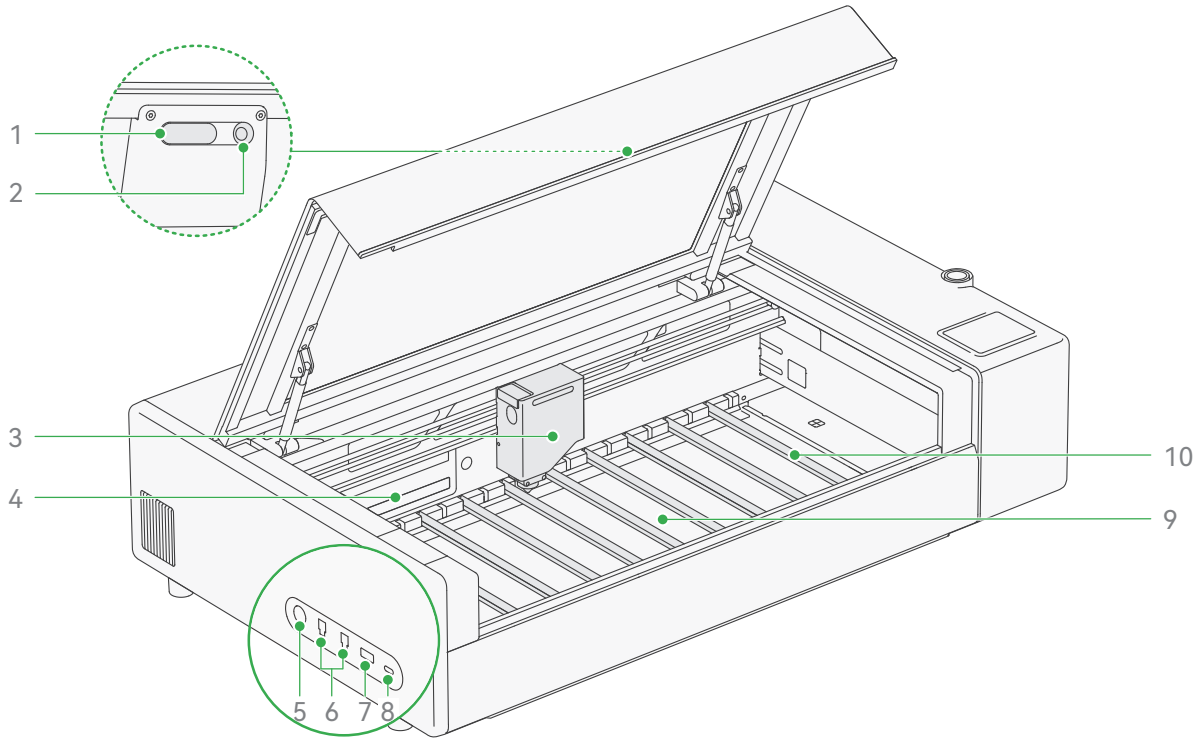

1. LED Fill Light
2. BirdsEye Camera
3. Toolhead
4. Ventilation Filter
5. Fire Extinguisher Connector
6. Bambu Bus Port 4-pin (Purifier/Extinguisher Expansion Port)
7. Safety Key (Pre-installed)
8. USB-C Port
9. Base Tray
10. Slat

2

© Botland B. Derkacz Sp. K. Copying, modifying or distributing this document in whole or in part without written consent is prohibited.
ID: BL-BML-29690-EN-0325112026-B3F73AD8

Part B.1 - Manufacturer's Quick Start Guide (original), p. 6 of 22

Product Overview

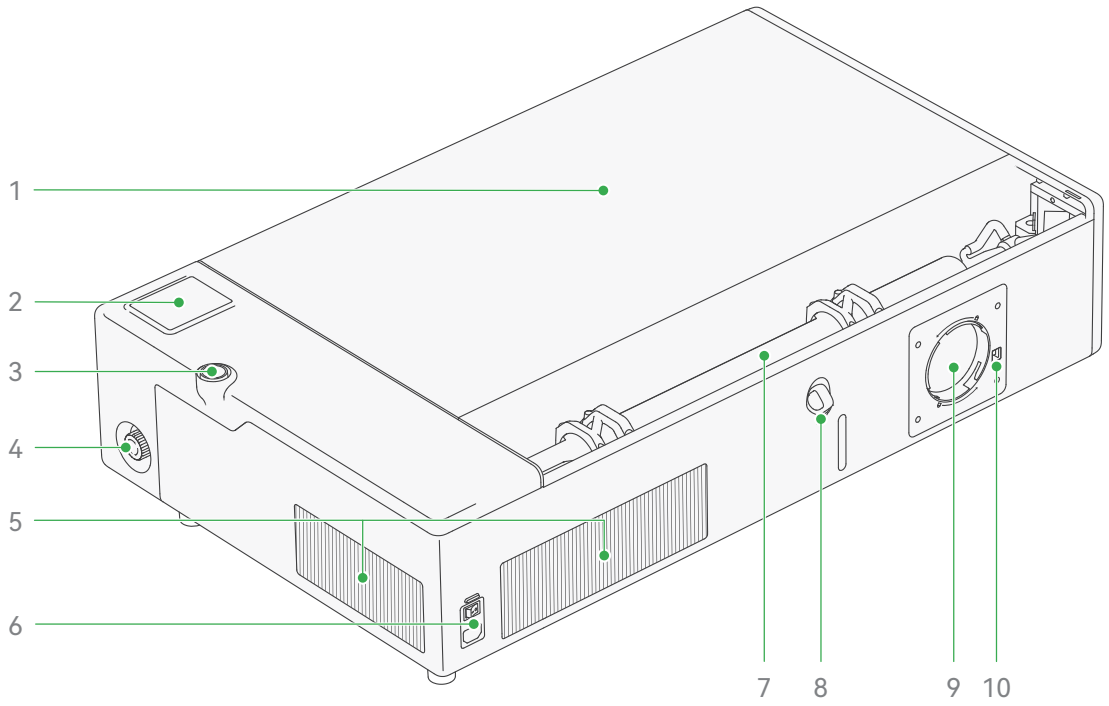

1. Laser Protective Lid
2. Touchscreen
3. Start/Pause Button
4. Emergency Stop Button
5. Radiator Grille
6. Power Socket and Switch
7. Laser Tube
8. Water Inlet
9. Smoke Ventilation Port
10. Bambu Bus Port 4-pin (for smoke ventilation fan)

3

© Botland B. Derkacz Sp. K. Copying, modifying or distributing this document in whole or in part without written consent is prohibited.
ID: BL-BML-29690-EN-0325112026-B3F73AD8

Part B.1 - Manufacturer's Quick Start Guide (original), p. 7 of 22

Product Overview

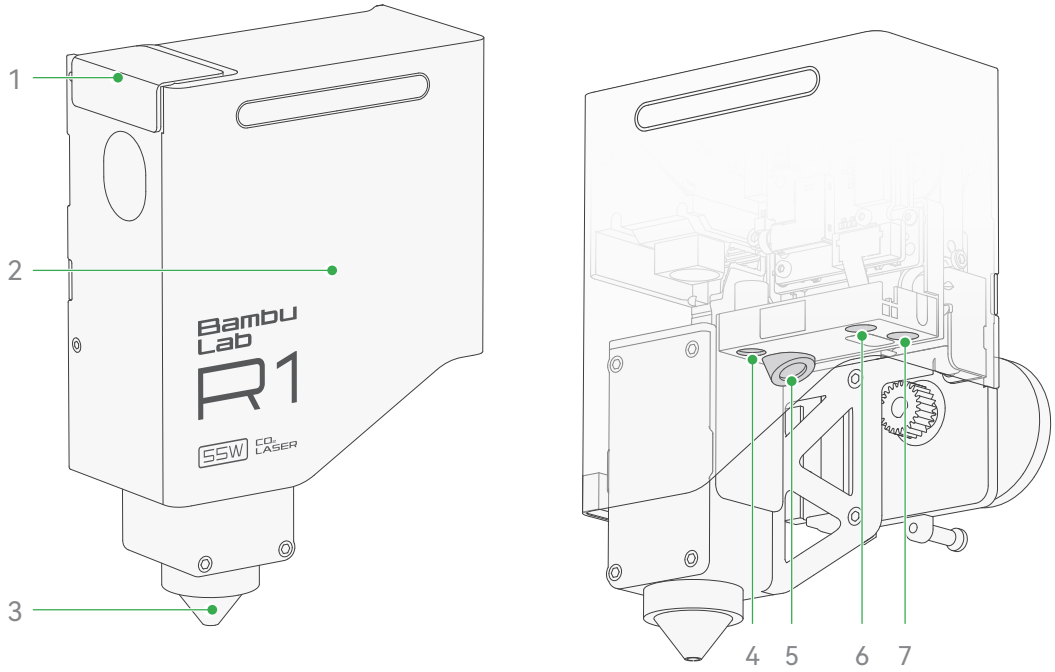

1. Reflective Mirror Service Cover
2. Toolhead Front Cover
3. Air Assist Nozzle
4. Pinpoint Laser (Red)
5. Distance Measurement Laser (Blue)
6. Flame Sensor
7. Toolhead Camera

4

© Botland B. Derkacz Sp. K. Copying, modifying or distributing this document in whole or in part without written consent is prohibited.
ID: BL-BML-29690-EN-0325112026-B3F73AD8

Part B.1 - Manufacturer's Quick Start Guide (original), p. 8 of 22

Unboxing Guide

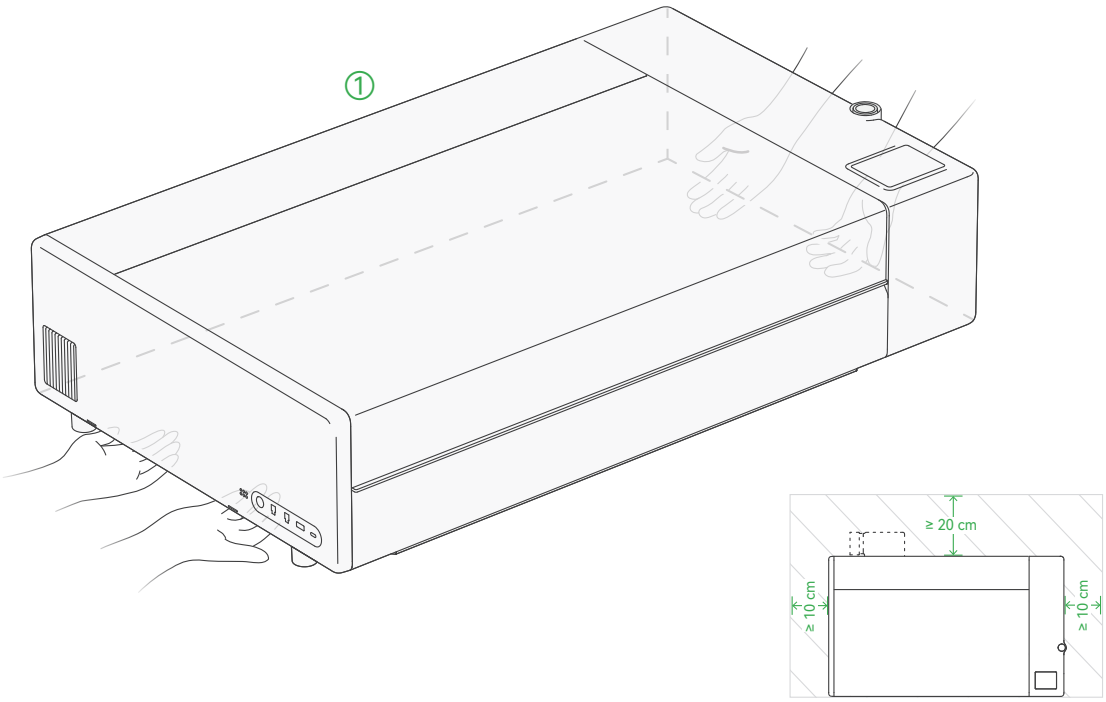

1. With two people, lift the product out of the packaging and place it on a stable, level surface. Remove the protective film from the lid.
   Tip: Allow sufficient clearance around the product for heat dissipation and installation of the smoke ventilation hose.

5

© Botland B. Derkacz Sp. K. Copying, modifying or distributing this document in whole or in part without written consent is prohibited.
ID: BL-BML-29690-EN-0325112026-B3F73AD8

Part B.1 - Manufacturer's Quick Start Guide (original), p. 9 of 22

Unboxing Guide

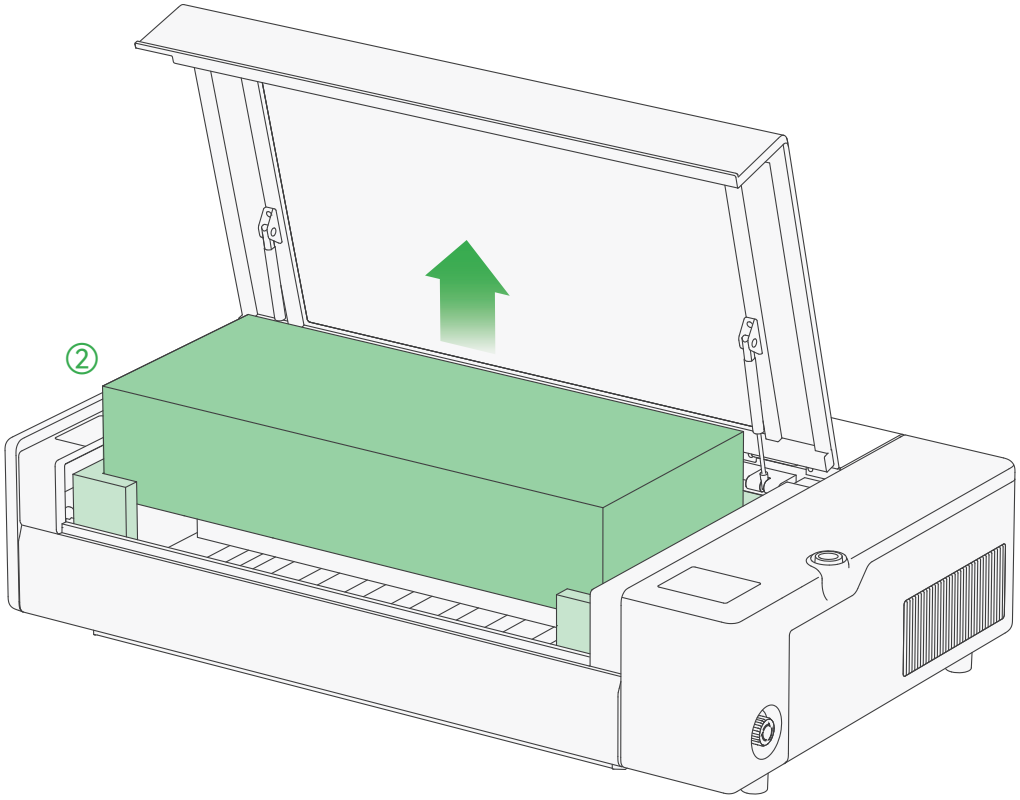

2. Open the protective lid and remove the cushioning materials and accessory box.
   Tip: It is recommended to keep all cushioning materials, shipping retainers, and the accessory box for shipping.

6

© Botland B. Derkacz Sp. K. Copying, modifying or distributing this document in whole or in part without written consent is prohibited.
ID: BL-BML-29690-EN-0325112026-B3F73AD8

Part B.1 - Manufacturer's Quick Start Guide (original), p. 10 of 22

Unboxing Guide

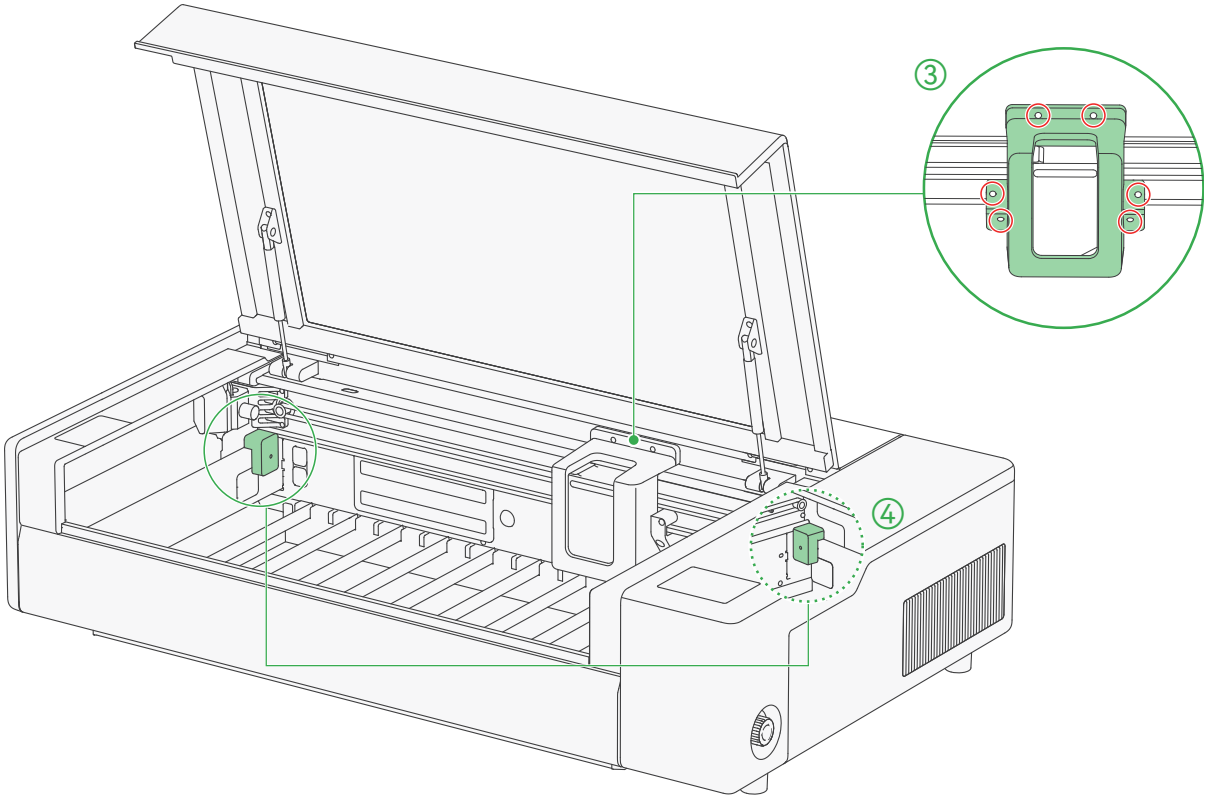

3. Use the included long H2.0 allen key to remove the **6** screws around the toolhead, then lift off the toolhead retainer.
4. Remove the screw(s) from the shipping retainer(s) on the Y-Axis, then take off the retainer(s).

7

© Botland B. Derkacz Sp. K. Copying, modifying or distributing this document in whole or in part without written consent is prohibited.
ID: BL-BML-29690-EN-0325112026-B3F73AD8

Part B.1 - Manufacturer's Quick Start Guide (original), p. 11 of 22

Install the Smoke Ventilation Accessories

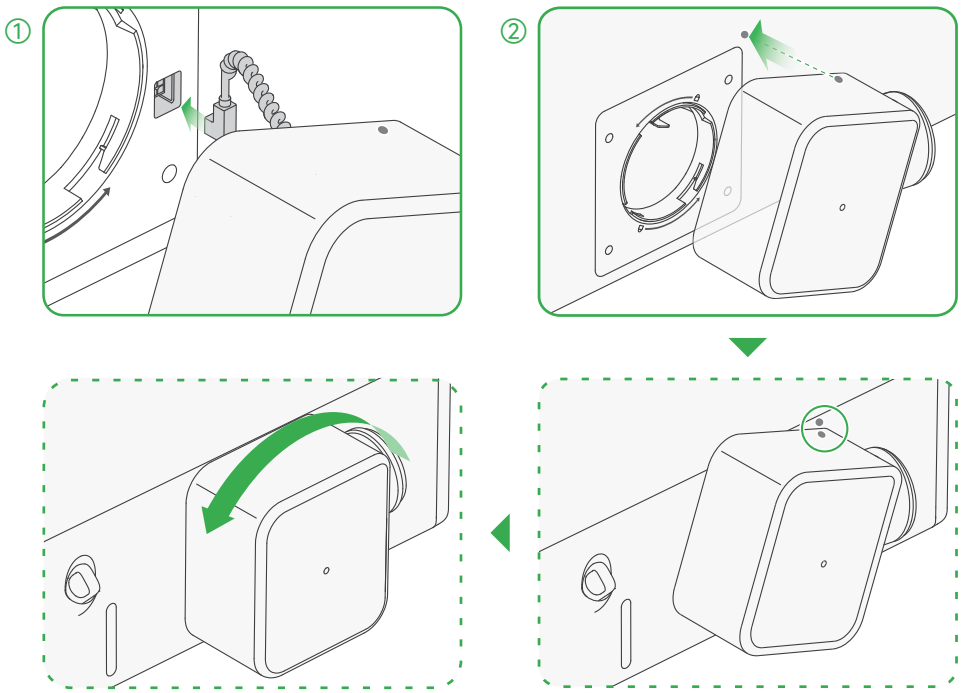

1. Take out the smoke ventilation fan. Plug the **built-in Bambu Bus cable 4-pin** into the Bambu Bus port 4-pin on the back of the product, then route it into the cable channel.
2. Align with the slot on the smoke ventilation port, **rotate the fan counterclockwise until you hear a "click" sound**.
   Tip: Check the alignment marks on the fan and the product to ensure it snaps into the correct position.

8

© Botland B. Derkacz Sp. K. Copying, modifying or distributing this document in whole or in part without written consent is prohibited.
ID: BL-BML-29690-EN-0325112026-B3F73AD8

Part B.1 - Manufacturer's Quick Start Guide (original), p. 12 of 22

Install the Smoke Ventilation Accessories

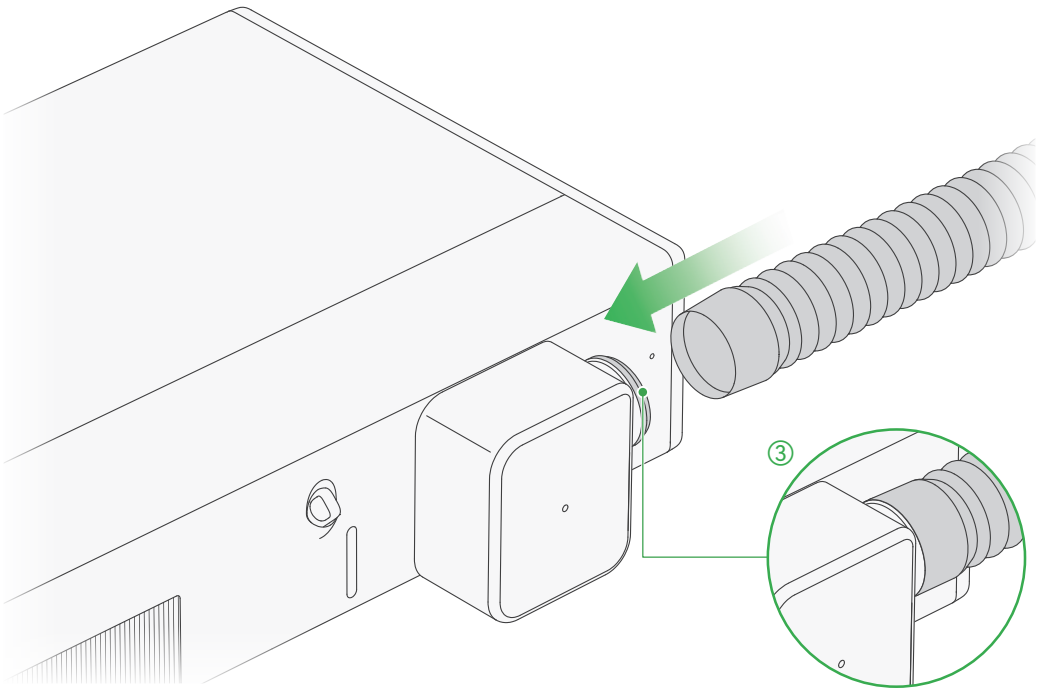

3. Take out the smoke ventilation hose. Fit the end with the hose connector onto the fan's air outlet, ensuring the smoke ventilation hose completely covers the O-ring, then place the other end in a well-ventilated location.
   Tip: If using the Bambu Lab E1 Pro Air Purifier (sold separately), connect the other end of the hose to the purifier, then plug its Bambu Bus cable 4-pin into the EXPANSION port on the side of the laser cutter.

9

© Botland B. Derkacz Sp. K. Copying, modifying or distributing this document in whole or in part without written consent is prohibited.
ID: BL-BML-29690-EN-0325112026-B3F73AD8

Part B.1 - Manufacturer's Quick Start Guide (original), p. 13 of 22

Fill the Coolant

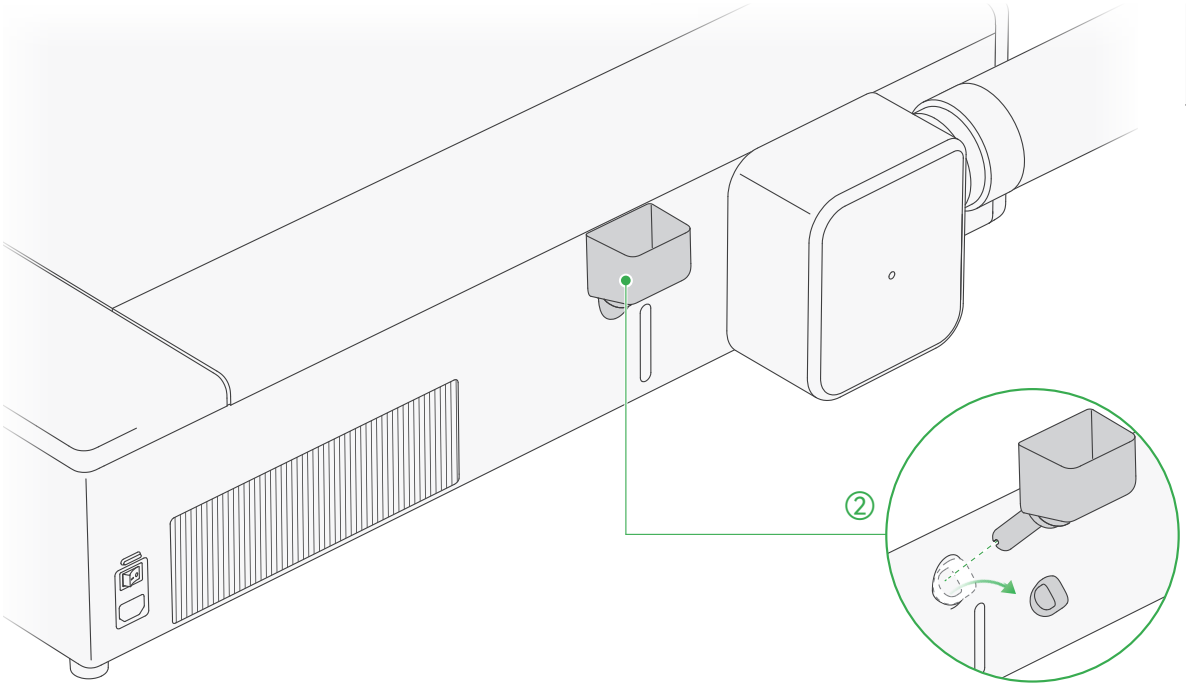

1. Prepare approximately 1500 mL of distilled water for later use.
2. Remove the water inlet plug and insert the funnel. Do not put your fingers into the water inlet to avoid injury.
   Warning: Do not use tap water or any water that may contain impurities, as this can severely affect laser tube performance and even cause product damage.

10

© Botland B. Derkacz Sp. K. Copying, modifying or distributing this document in whole or in part without written consent is prohibited.
ID: BL-BML-29690-EN-0325112026-B3F73AD8

Part B.1 - Manufacturer's Quick Start Guide (original), p. 14 of 22

Fill the Coolant

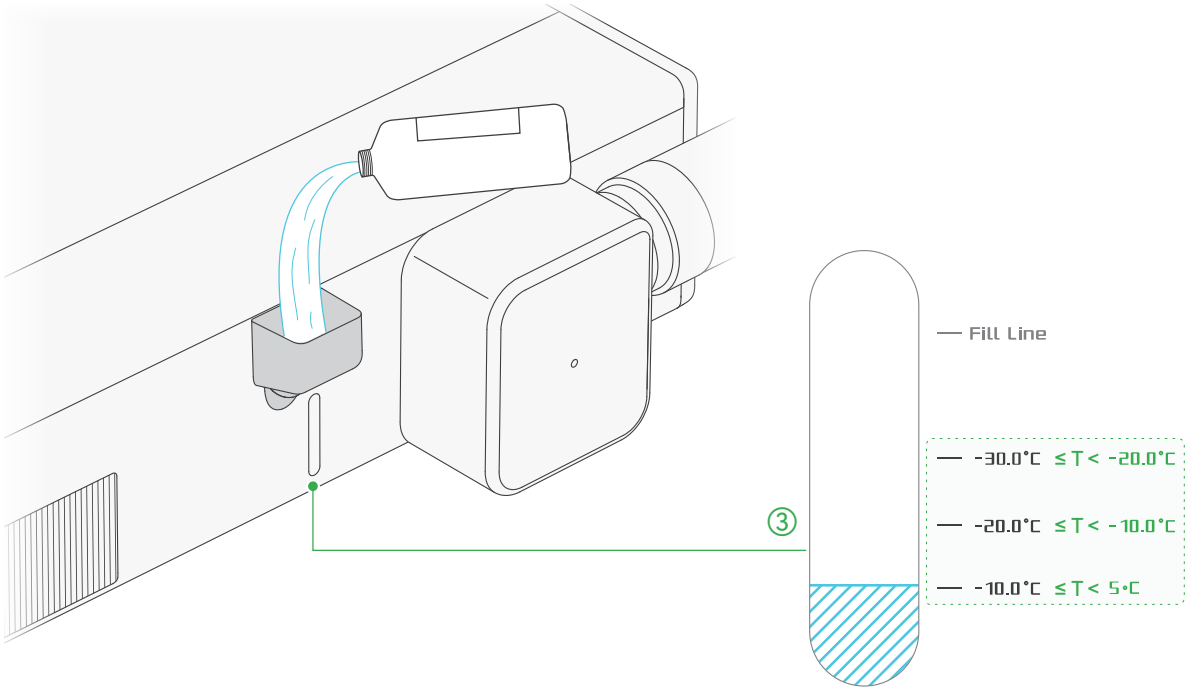

3. **Add Anti-freeze**: Determine whether anti-freeze is needed based on the lowest annual temperature at the product's installation location.
   - **If the temperature may drop below 5°C**, anti-freeze is required. Look directly at the water tank and add anti-freeze up to the corresponding temperature mark.
   - **If the temperature never drops below 5°C**, do not add anti-freeze. Proceed to the next step.

11

© Botland B. Derkacz Sp. K. Copying, modifying or distributing this document in whole or in part without written consent is prohibited.
ID: BL-BML-29690-EN-0325112026-B3F73AD8

Part B.1 - Manufacturer's Quick Start Guide (original), p. 15 of 22

Fill the Coolant

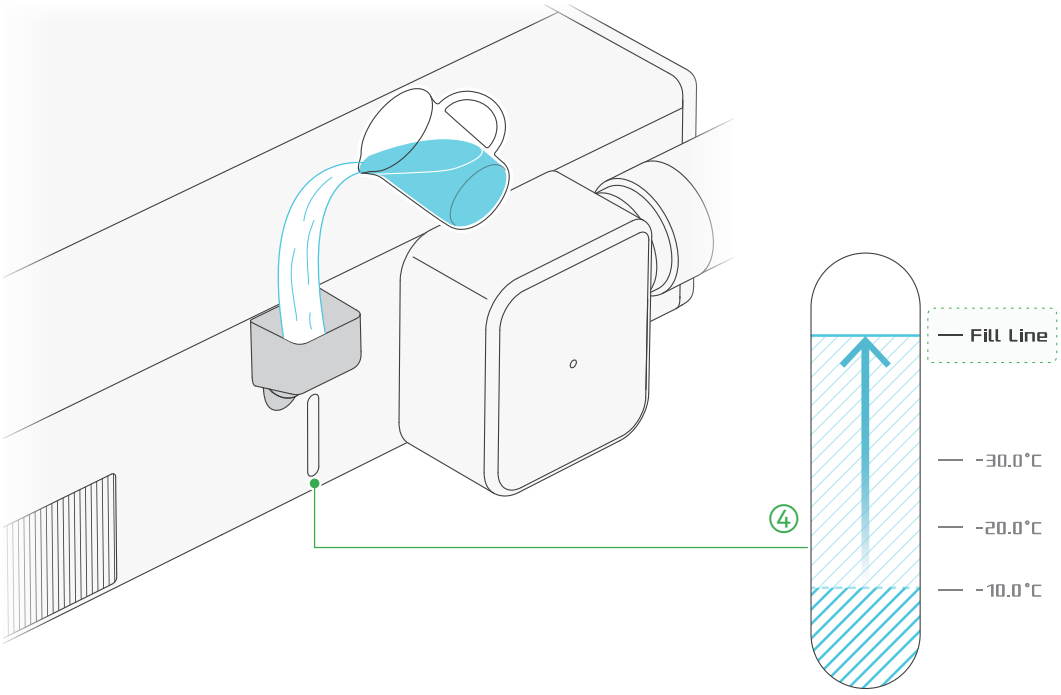

4. **First Fill of Distilled Water**: Looking straight at the water tank, fill distilled water to the **Fill Line** mark. The water level may be slightly above the mark.

12

© Botland B. Derkacz Sp. K. Copying, modifying or distributing this document in whole or in part without written consent is prohibited.
ID: BL-BML-29690-EN-0325112026-B3F73AD8

Part B.1 - Manufacturer's Quick Start Guide (original), p. 16 of 22

Fill the Coolant

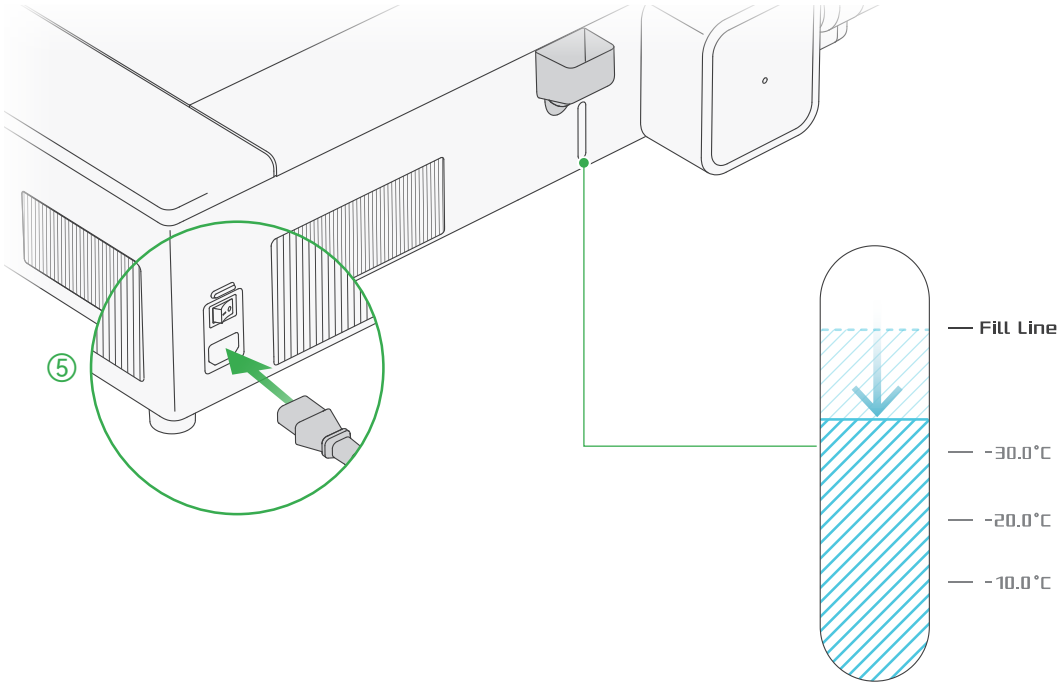

5. Take out the power cord, connect the product to a wall outlet and switch on the power. After the product starts up, wait for the water level in the tank to drop (approximately 30 seconds), then proceed to the next step.

13

© Botland B. Derkacz Sp. K. Copying, modifying or distributing this document in whole or in part without written consent is prohibited.
ID: BL-BML-29690-EN-0325112026-B3F73AD8

Part B.1 - Manufacturer's Quick Start Guide (original), p. 17 of 22

Fill the Coolant

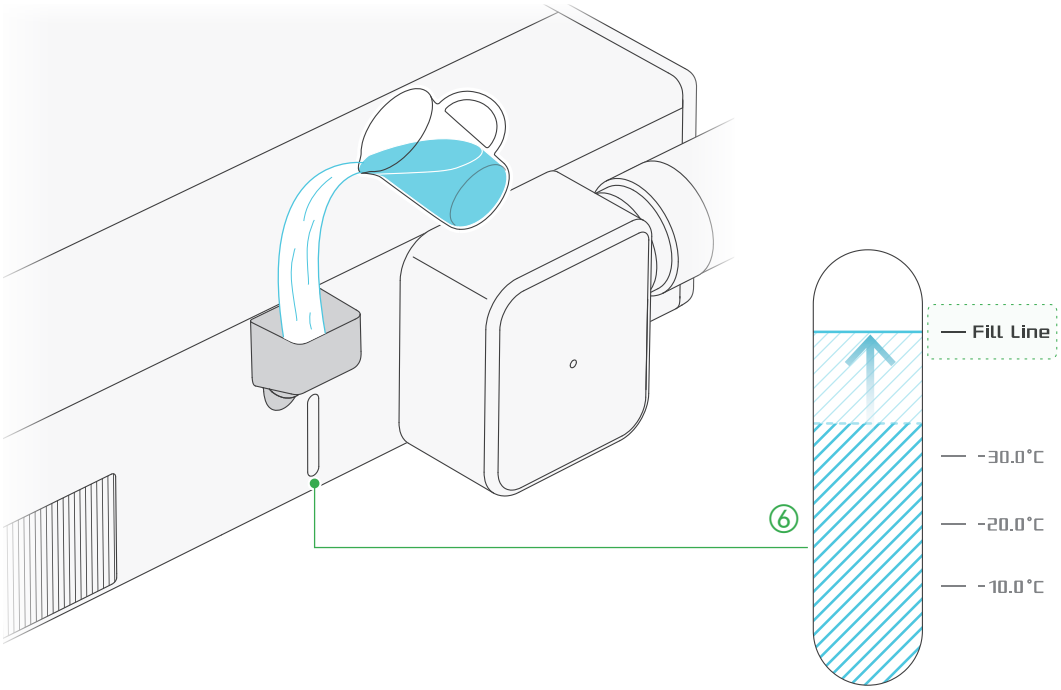

6. **Top Up Distilled Water**: Look straight at the water tank, refill distilled water to the **Fill Line** mark.
   Tip: After filling, remove the funnel and reinsert the plug.

14

© Botland B. Derkacz Sp. K. Copying, modifying or distributing this document in whole or in part without written consent is prohibited.
ID: BL-BML-29690-EN-0325112026-B3F73AD8

Part B.1 - Manufacturer's Quick Start Guide (original), p. 18 of 22

Bind the Device - Bambu Handy

1. Scan the QR code on the right to download Bambu Handy. Register and log in to your Bambu Lab account.



2. Follow the instructions on the touchscreen until a QR code appears.

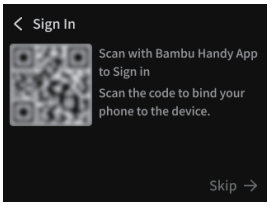

3. Scan the QR code on Bambu Handy to bind the device to your Bambu Lab account.

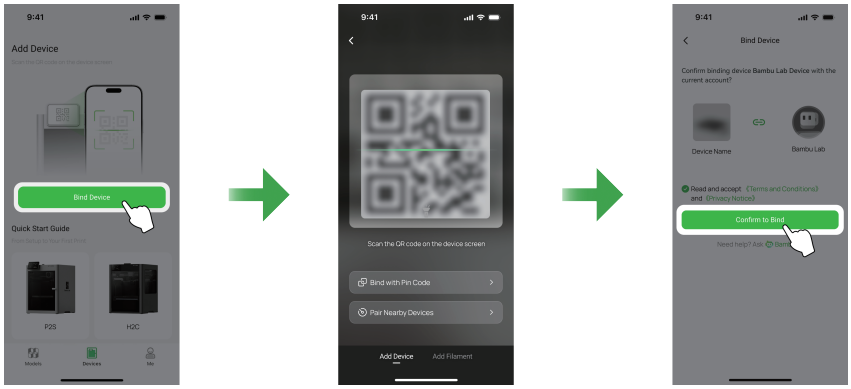

4. Follow the instructions on the screen to complete the initial calibration. It is normal to have vibration and noise during the process.

15

© Botland B. Derkacz Sp. K. Copying, modifying or distributing this document in whole or in part without written consent is prohibited.
ID: BL-BML-29690-EN-0325112026-B3F73AD8

Part B.1 - Manufacturer's Quick Start Guide (original), p. 19 of 22

Bind the Device - Bambu Suite



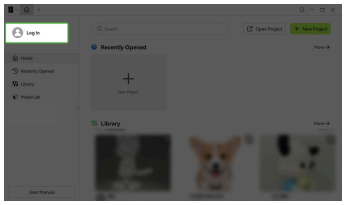

1. Connect both the computer and device to the **same wireless network**, and do not use a **guest network** that has network device separation enabled.

2. Visit the link below to download and install Bambu Suite. Register and log in to your Bambu Lab account.
bambulab.com/download/suite

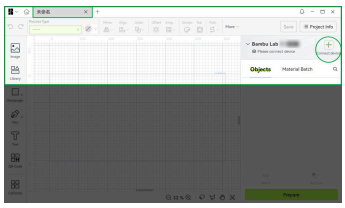

3. Click the "+" on the project page, and Bambu Suite automatically discovers devices on the same network. Click the detected device to bind it to your account.

4. After completing the onboarding guide, you can view the first use tutorial on the official Bambu Lab Wiki.
bambulab.com/r1-use-guide

16

© Botland B. Derkacz Sp. K. Copying, modifying or distributing this document in whole or in part without written consent is prohibited.

Part B.1 - Manufacturer's Quick Start Guide (original), p. 20 of 22

Regular Maintenance

During laser processing, large amounts of smoke, dust, and debris are generated, which gradually accumulate throughout the product over time. To ensure stable operation and maintain high-quality laser processing results, regular maintenance and care are required.

Metal Moving Parts:

- Regularly clean the X-Axis linear rods, X belt, and Z-Axis linear rail. Apply lubricant grease to the linear rod and use lubricant oil for the linear rail in a timely manner.

Ventilation System:

- Regularly inspect and clean dust buildup on the ventilation filter and smoke ventilation fan. Replace if necessary.

Chamber & Other Components:

1. Clean debris and dust from the base tray and inside the chamber after processing.
2. Regularly clean the air assist nozzle, focusing lens, and the first-level, second-level, and third-level reflective mirrors to prevent reduced focusing performance and reflectivity.
3. Regularly clean the birdseye camera, toolhead camera, and vision markers on the bottom.

Replace Coolant:

- Regularly drain the water tank. Follow the sticker guide on the water tank, mix anti-freeze and distilled water at the corresponding concentration, then refill to the Fill Line mark.

bambulab.com/support/r1/maintenance

Refer to the "Regular Maintenance Recommendations" section on our wiki for more information.

17

© Botland B. Derkacz Sp. K. Copying, modifying or distributing this document in whole or in part without written consent is prohibited.

Part B.1 - Manufacturer's Quick Start Guide (original), p. 21 of 22

Technical Support

If you need technical support, please follow any of the following methods:

Method 1: Visit the Bambu Lab Wiki for tutorials and maintenance guidance.
wiki.bambulab.com

Bambu Lab Wiki

Method 2: Get in touch through one of the options listed in the Contact Us section of our Support Center.
bambulab.com/support

Bambu Lab Support Center

Method 3: Create a support ticket on Bambu Handy, from the Support Center section.

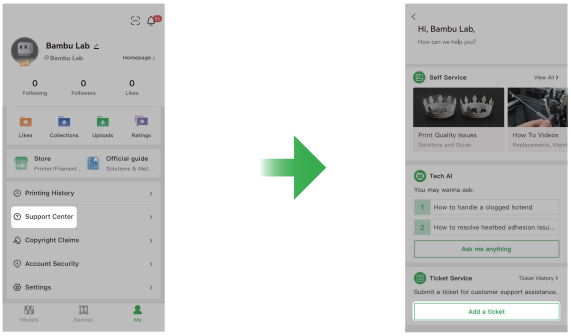

18

© Botland B. Derkacz Sp. K. Copying, modifying or distributing this document in whole or in part without written consent is prohibited.
ID: BL-BML-29690-EN-0325112026-B3F73AD8

Part B.1 - Manufacturer's Quick Start Guide (original), p. 22 of 22



© Botland B. Derkacz Sp. K. Copying, modifying or distributing this document in whole or in part without written consent is prohibited.

Part B.2 - Manufacturer's Disclaimer and Safety Guidelines (English), p. 1 of 48

Bambu Lab

Bambu Lab R1 Disclaimer and Safety Guidelines

D00296-04

© Botland B. Derkacz Sp. K. Copying, modifying or distributing this document in whole or in part without written consent is prohibited.

Part B.2 - Manufacturer's Disclaimer and Safety Guidelines (English), p. 3 of 48

English

Disclaimer and Warning

Thanks for purchasing a Bambu Lab product. The information in this Disclaimer and Safety Guidelines (hereinafter referred to as "this Guide") affects your safety and your legal rights and responsibilities. Read this Guide carefully to ensure proper configuration before use. Failure to read and follow instructions and warnings in this Guide may result in serious injury to yourself or others, damage to your Bambu Lab product, or damage to other objects in the vicinity. To the fullest extent permitted by applicable laws and regulations, Bambu Lab reserves the right of final interpretation of this Guide and all related documents of Bambu Lab products. **By using this product, you hereby signify that you have read this disclaimer and warning carefully and that you understand, acknowledge, and accept all terms and contents of this statement. You hereby agree that you are solely responsible for your own conduct while using this product, and for any consequences thereof. You agree to use this product only for proper purposes and in accordance with this Guide, as well as any relevant terms, policies, and guidelines made available by Bambu Lab.**

Bambu Lab shall not be liable for any loss arising from your failure to use this product in accordance with this Guide, the Quick Start Guide, other documents, or applicable laws and regulations. To the maximum extent permitted by applicable laws and regulations, **Bambu Lab may modify this Guide, or modify, remove, or terminate service features at its sole discretion at any time. In the event of any material change, suspension, or termination of this Guide, we will notify you by posting a notice on our website or by other means.** Bambu Lab is a trademark of Shenzhen Tuozhu Technology Co., Ltd. and its affiliated companies.

Before You Start

The following documents have been produced to help you safely operate and make full use of your Bambu Lab product:

- Disclaimer and Safety Guidelines
- Quick Start Guide

Check that you have all the included parts. Please review the entire Quick Start Guide before operating the product.

Read the Disclaimer and Warning above to understand your legal rights and responsibilities. The latest version of this document is available on the Bambu Lab official website: **https://bambulab.com/support/documentation**. If you have any questions or problems during the installation, maintenance, or use of this product, please contact Bambu Lab or a Bambu Lab authorized dealer.

Safety Guidelines

Operating Requirements

Please read the following safety guidelines carefully to ensure the safe and proper use of this product and its laser system:

1) As this product incorporates a laser system, you must thoroughly read the Laser Safety Instructions, Important Laser Use Information, and other relevant guidance before use. Ensure that you have read these documents or received the necessary training and possess the required knowledge and experience prior to operation. **Untrained personnel must not operate this product or its laser system.** Visit the Bambu Lab official Wiki (**wiki.bambulab.com/r1**) for the complete training content.
2) A safety key is provided to reduce the risk of personal injury or property damage caused by unauthorized or untrained operation. Store and use the safety key responsibly. **Insert the key to enable the laser function and remove it to disable the laser function.**
3) This product is not intended for use by children. Install and store the device in a location inaccessible to children. During operation, keep children, pets, and bystanders away from the device.
4) Keep the work area clean and orderly. Ensure that the surface supporting the device is stable and structurally sound.
5) This product is intended for indoor use only. Operate it in a dry, clean, and well-ventilated environment. Place the product on a stable, level, non-flammable surface with sufficient load-bearing capacity.
6) Operate and store the device only within the temperature and humidity ranges specified in the product specifications. Do not operate the product in environments with condensation, frost, excessive humidity, sub-zero temperatures, or other conditions outside the specified range. **Never operate the product at temperatures below 5 °C**, as this may cause irreversible damage and create serious safety risks.
7) Inspect the product for damage before each use. If any damage or defect is found, stop using the product immediately. Never operate a damaged or defective device.
8) Before operating the product, identify the location of the emergency stop button and understand how to use it. Press the button to immediately stop operation and disconnect power. Rotate the button clockwise to release it and restore power.
9) Keep all parts of your body outside the device while the toolhead is calibrating or performing any other mechanical movement. In an emergency, press the emergency stop button immediately.
10) Do not touch the interior of the device while it is operating.
11) Do not disassemble, modify, or alter the device, its structure, its components, or its intended use without authorization and guidance from Bambu Lab after-sales support.
12) Properly install and secure the complete exhaust system, including the smoke extraction fan, ventilation hose, and all related components. If smoke or unusual odors are detected, stop operation and inspect the exhaust system immediately. Correct any issues before resuming use.
13) Installation and maintenance must be performed by qualified personnel in accordance with official operating instructions and applicable local safety regulations.
14) Never operate the product without the base tray correctly installed. Do not remove the base tray or open the protective lid while the product is operating.
15) This product uses a water-cooling system. Prepare and add anti-freeze in accordance with the official operating instructions. Do not place your hands inside the water tank.

Laser Safety

1) The laser system operates within a sealed enclosure equipped with a safety interlock. This mechanism helps prevent direct exposure to laser radiation. If the protective lid or another interlocked component is opened during laser operation, the laser system will stop immediately.
2) When used with certain accessories, such as the Conveyor, the product may change from an enclosed Class 1 laser product to a Class 4 laser product. Strictly follow all warnings and instructions provided in the accessory documentation and on the product labels to reduce the risk of serious injury or property damage.
3) Never operate the product with any panel, cover, enclosure component, or safety device removed. Doing so may expose the laser system and increase the risk of personal injury or equipment damage.
4) Do not stare into the laser processing area through the enclosure for extended periods.

2

© Botland B. Derkacz Sp. K. Copying, modifying or distributing this document in whole or in part without written consent is prohibited.

Part B.2 - Manufacturer's Disclaimer and Safety Guidelines (English), p. 4 of 48

5) Use the laser only within the designated processing area inside the product. Never direct the laser beam toward any person or outside its intended operating range. Remove unnecessary reflective objects from the beam path and surrounding area, including watches, jewelry, and tools.
6) Never look directly into the laser aperture while the laser system is powered on, particularly when any protective panel or enclosure component has been removed.
7) The laser beam is transmitted through a series of reflective mirrors, with sections of free-air propagation between them. Do not operate the product if the enclosure, mirrors, protective panels, or other laser-related components are damaged. Stop using the device immediately and contact authorized technical support.

Material Safety

1) **Use only materials and processing parameters officially recommended by Bambu Lab or verified as compatible with the product.** Before using a non-recommended material, confirm that it is suitable and safe for laser processing. Contact official technical support when compatibility or safety is uncertain.
2) Exercise particular caution when processing highly reflective materials. Do not process uncoated metals or similar reflective materials unless they are specifically approved for use with the product, as reflected laser energy may damage the device or cause injury.
3) Some materials may release hazardous, corrosive, or irritating gases during processing. Before use, verify the composition and safety information for each material. Ensure that the exhaust system is correctly installed, the exhaust pathway is unobstructed, and the surrounding area is adequately ventilated. Comply with all applicable environmental and emissions regulations.

Fire Safety

1) Become familiar with appropriate fire-prevention and emergency-response procedures before operating the product.
2) Keep flammable, explosive, and volatile substances, including alcohol, gasoline, solvents, and loose paper, away from the product and its exhaust system.
3) The product must remain under direct, on-site supervision throughout operation. Continuously monitor the device, indicator lights, status display, processed material, signs of ignition or combustion, and any unusual sounds or odors. **Never leave the device operating unattended.**
4) Regularly clean the device, processing area, base tray, and exhaust pathway to remove dust, residue, scraps, and other combustible debris.
5) The use of a compatible automatic fire-extinguishing system is recommended as an additional safety measure. Install and maintain the system, including any gas cylinder, strictly in accordance with the Quick Start Guide and the fire-extinguishing system manufacturer's instructions.
6) Keep suitable fire-extinguishing equipment readily accessible in the workspace. This may include an appropriate fire extinguisher or an approved automatic fire-suppression system. Install, inspect, and maintain all fire-safety equipment in accordance with the manufacturer's instructions and applicable local regulations.

Electrical Safety

1) Connect this product only to a properly installed mains socket with a protective earth connection.
2) Do not power the product through multi-plug adapters, power strips, or extension cords.
3) Switch off the product and disconnect it from the power supply before installation, cleaning, inspection, or maintenance.
4) Do not operate the power switch, connect or disconnect the power cable, or touch electrical components with wet hands or while any part of your body is wet. Do not operate the product while barefoot.

Storage and Maintenance

1) When the product is not in use, secure the laser components and safety key to prevent unauthorized or untrained operation.
2) When using the product with a Bambu Lab E1 Pro air purifier, inspect, maintain, and replace the air filters at the intervals specified in the applicable instructions. Proper maintenance is necessary to preserve the effectiveness of the purifier and exhaust system.
3) Operate and store the laser system only within the specified temperature ranges. The recommended operating temperature is 10 °C to 30 °C, and the recommended storage temperature is 5 °C to 35 °C.
4) When storing the product in cold-weather conditions, determine the lowest expected local temperature and prepare the cooling system with the appropriate concentration of anti-freeze in accordance with the official instructions. This guidance applies only where temperatures remain above -30 °C. An incorrect anti-freeze concentration may damage the cooling system or product.

Emergency Measures

1) If flames, open fire, excessive smoke, or any other fire hazard is detected, stop using the device immediately and press the emergency stop button. Maintain a safe distance and use an appropriate fire extinguisher only if it is safe to do so. If the fire cannot be controlled, evacuate the area immediately and contact emergency services.
2) Ensure that all exhaust components are correctly installed and that the device is operated in a well-ventilated environment. This helps reduce the risk of respiratory irritation or other health effects caused by smoke or fumes. If you experience coughing, dizziness, breathing difficulty, eye irritation, or any other related symptoms, stop using the device immediately, move to fresh air, and seek medical attention.
3) Under no circumstances stare directly at the laser spot or its reflections through the protective enclosure for extended periods. Prolonged viewing may cause eye discomfort or visual disturbance. If discomfort occurs, stop viewing the laser immediately and rest your eyes by closing them or looking at a distant object. Seek medical attention if symptoms persist or worsen.

Warning Sign

Read and follow all relevant safety instructions, including the labels on the device and the laser safety documentation. For further guidance, please also refer to the following laser safety standards: **EN 60825-1:2014+A11:2021, IEC 60825-1:2014, ANSI Z136.1-2022, GB/T 7247.1-2024, BS EN 60825-1:2014+A11:2021, and AS/NZS 60825-1:2014.**

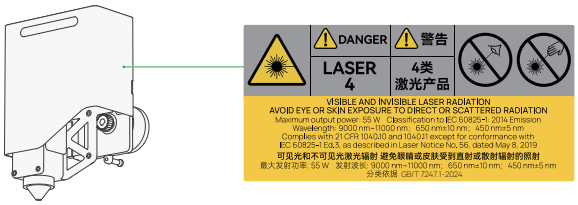

CAUTION! DANGER ELECTRIC SHOCK

CAUTION HOT! DO NOT TOUCH

3

© Botland B. Derkacz Sp. K. Copying, modifying or distributing this document in whole or in part without written consent is prohibited.
ID: BL-BML-29690-EN-0325112026-B3F73AD8

Part B.2 - Manufacturer's Disclaimer and Safety Guidelines (English), p. 5 of 48

ATTENTION ! DANGER CHOC ÉLECTRIQUE

ATTENTION CHAUD ! NE PAS TOUCHER



CAUTION! KEEP CLEAR OF MOVING PARTS
ATTENTION ! RESTER À L'ÉCART DES PIÈCES MOBILES



CAUTION! KEEP CLEAR OF MOVING FAN BLADE
ATTENTION ! RESTER À L'ÉCART DES PALES DE VENTILATEUR EN MOUVEMENT



LASER APERTURE
OUVERTURE LASER

Compliance Information

CLASS 1 LASER PRODUCT

- When used with specific accessories (such as the Riser Base, Conveyor, etc.), the product changes from an enclosed Class 1 device to a Class 4 device, and is restricted to professional use by trained personnel only.

Max. Output Power: <1 mW
Emission Wavelength: 9000 nm-11,000 nm, 650 nm±10 nm, 450 nm±5 nm
Complies with GB/T 7247.1-2024.

FCC Compliance Notice

Supplier's Declaration of Conformity
Product name: R1
Model Number: LM001-P
Responsible Party: Shenzhen Tuozhu Technology Co., Ltd. (Bambulab USA Inc)
Responsible Party Address: 8000 Centre Park Drive, STE 330, Austin, TX, 78754
Website: **https://www.bambulab.com**

We, Shenzhen Tuozhu Technology Co., Ltd. (Bambulab USA Inc), being the responsible party, declare that the above mentioned model was tested to demonstrate compliance with all applicable FCC rules and regulations.
This device complies with Part 15 of the FCC Rules. Operation is subject to the following two conditions: (1) This device may not cause harmful interference, and (2) This device must accept any interference received, including interference that may cause undesired operation. Warning: Changes or modifications not expressly approved by the party responsible for compliance could void the user's authority to operate the equipment.
NOTE: This equipment has been tested and found to comply with the limits for a Class B digital device, pursuant to Part 15 of the FCC Rules. These limits are designed to provide reasonable protection against harmful interference in a residential installation. This equipment generates, uses, and can radiate radio frequency energy and, if not installed and used in accordance with the instructions, may cause harmful interference to radio communications. However, there is no guarantee that interference will not occur in a particular installation.
If this equipment does cause harmful interference to radio or television reception, which can be determined by turning the equipment off and on, the user is encouraged to try to correct the interference by one or more of the following measures:

- Reorient or relocate the receiving antenna.
- Increase the separation between the equipment and the receiver.
- Connect the equipment to an outlet on a circuit different from that to which the receiver is connected.
- Consult the dealer or an experienced radio/TV technician for help.

The devices are restricted to indoor operation only in the band 5150-5250 MHz.

FCC Radiation Exposure Statement

This equipment complies with FCC radiation exposure limits set forth for an uncontrolled environment. This equipment should be installed and operated with a minimum distance of 20 cm between the radiator and your body.

ISED Compliance Notice

This device contains license-exempt transmitter(s)/receiver(s) that comply with Innovation, Science and Economic Development Canada's license-exempt RSS(s). Operation is subject to the following two conditions:
(1) This device may not cause interference. (2) This device must accept any interference, including interference that may cause undesired operation of the device.
L'émetteur/récepteur exempt de licence contenu dans le présent appareil est conforme aux CNR d'Innovation, Sciences et Développement économique Canada applicables aux appareils radio exempts de licence. L'exploitation est autorisée aux deux conditions suivantes:
(1) L'appareil ne doit pas produire de brouillage; (2) L'appareil doit accepter tout brouillage radioélectrique subi, même si le brouillage est susceptible d'en compromettre le fonctionnement.
The device for operation in the band 5150–5250 MHz is only for indoor use to reduce the potential for harmful interference to co-channel mobile satellite systems.
Les dispositifs fonctionnant dans la bande de 5150 à 5250 MHz sont réservés uniquement pour une utilisation à l'intérieur afin de réduire les risques de brouillage préjudiciable aux systèmes de satellites mobiles utilisant les mêmes canaux.

ISED Radiation Exposure Statement

The device meets the exemption from the routine evaluation limits in section 2.5 of RSS-102 and compliance with RSS-102 RF exposure; users can obtain Canadian information on RF exposure and compliance.
This equipment should be installed and operated with a minimum distance of 20 centimeters between the radiator and your body.
Le dispositif est conforme à l'exemption des limites d'évaluation de routine de la section 2.5 de la norme RSS-102 et à la conformité à l'exposition aux RF de la norme RSS-102. Les utilisateurs peuvent obtenir des informations canadiennes sur l'exposition aux RF et la conformité.
Cet équipement doit être installé et utilisé avec une distance minimale de 20 centimètres entre le radiateur et votre corps.
Cet émetteur ne doit pas être co-situé ou fonctionner en conjonction avec une autre antenne ou un autre émetteur.

EU Compliance Statement

Hereby, Shenzhen Tuozhu Technology Co., Ltd. declares that the radio equipment type R1 is in compliance with Directive 2014/53/EU. The full text of the EU declaration of conformity is available at the following internet address: **https://bambulab.com/en/euro-compliance**
The functions of Wireless Access Systems including Radio Local/Area Networks(WAS/RLANS) within the band 5150-5350 MHz for this device are restricted to indoor use only within all European Union countries (BE/BG/CZ/DK/DE/EE/IE/EL/ES/FR/HR/ IT/CY/LV/LT/LU/HU/MT/NL/AT/PL/PT/RO/SI/SK/FI/SE/TR/NO/CH/IS/LI/UK(NI)/UK).

UK Compliance Statement

Bambu Lab hereby declares that our devices comply with 2023 No. 1007 CONSUMER PROTECTION The Product Security and Telecommunications Infrastructure (Security Requirements for Relevant Connectable Products) Regulations 2023. For more information about UK PSTII compliance, please visit: **https://bambulab.com/psti-compliance**
Hereby, Shenzhen Tuozhu Technology Co., Ltd., declares that the radio

4

© Botland B. Derkacz Sp. K. Copying, modifying or distributing this document in whole or in part without written consent is prohibited.

Part B.2 - Manufacturer's Disclaimer and Safety Guidelines (English), p. 6 of 48

equipment type R1 is in compliance with Radio Equipment Regulations 2017. The full text of the GB declaration of conformity is available at the following internet address: **https://bambulab.com/en/euro-compliance**
E-labeling information: On the product's screen, please go to Settings › Regulation Certification to view the product's certification information.

Specifications

Basic Information	
Physical Dimensions	940×560×200 mm
Package Dimensions	1095×725×310 mm
Net Weight	Approx. 33.5 kg
Max Input Power	780 W
Input Voltage	100-240 VAC, 50/60 Hz
Recommended Operating Temperature	10 °C to 30 °C
Operating Parameters	
Laser Type	55 W CO_2 Laser
Supported Materials	Cutting & Engraving: Wood, Acrylic (including transparent acrylic), Leather, Textiles, Paper, EVA Foam, Shell Sheets, etc. Engraving Only: Coated Metals (excluding uncoated metal), Glass, Ceramics, etc.
Working Area	Standalone: 600 × 300 mm; With Conveyor (Sold Separately): 600 × 3000 mm
Max. Working Speed	Speed: 1000 mm/s; Acceleration: 20,000 mm/s^2
Safety Interlocks	Lid Open Protection, Flame Detection, Automatic Fire Suppression (Supported with Auto Fire Extinguishing System)
Connection	
Wireless Network	Dual-Band Wi-Fi
USB-C	Supported
Wi-Fi	
Operating Frequency	• 2412 - 2472 MHz, 5150 - 5850 MHz (FCC/CE) • 2400 - 2483.5 MHz, 5150 - 5850 MHz (SRRC)
Wi-Fi Transmitter Power (EIRP)	• 2.4 GHz: ‹23 dBm (FCC); ‹20 dBm (CE/SRRC/MIC) • 5 GHz Band1/2: ‹23 dBm (FCC/CE/SRRC/MIC) • 5 GHz Band3: ‹30 dBm (CE); ‹24 dBm (FCC) • 5 GHz Band4: ‹23 dBm (FCC/SRRC); ‹14 dBm (CE)
Wi-Fi Protocol	IEEE 802.11 a/b/g/n/ac/ax

日本語

免責事項および警告

Bambu Lab製品をご購入いただき、誠にありがとうございます。 本免責事項および安全ガイドライン（以下「本ガイド」）には、お客様の安全、ならびに法的権利と責任に関する重要な情報が記載されています。 ご使用前に本ガイドを熟読し、適切な設定を行ってください。 本ガイドの指示および警告をお読みにならず、これらに従わなかった場合、お客様ご自身や第三者の重傷、Bambu Lab製品の破損、または周囲の物品の損傷を招く恐れがあります。 適用される法令が許容する最大限の範囲において、本ガイドおよびBambu Lab製品のすべての関連文書については、Bambu Labが独自の裁量により最終的な決定を下す権利を有します。 **本製品の使用をもって、お客様は本免責事項および警告を熟読し、本声明のすべての条件および内容を理解し、承諾したものとみなされます。 お客様は、本製品の使用中のご自身の行為、およびそれに起因する結果について、単独で一切の責任を負うことに同意するものとします。 お客様は、正当な目的のため、かつ本ガイド、ならびにBambu Labが提供する関連するすべての条件、ポリシー、およびガイドラインに従ってのみ、本製品を使用することに同意するものとします。**

お客様が本ガイド、クイックスタートガイド、その他の文書、または適用される法令に従って本製品を使用しなかったことに起因するいかなる損害についても、Bambu Labは一切の責任を負いかねます。 適用される法令が許容する最大限の範囲において、**Bambu Labは独自の裁量により、いつでも本ガイドを変更し、またはサービスの機能を変更、削除、もしくは終了する権利を有します。 本ガイドに重大な変更、一時停止、または終了が生じた場合、当社はウェブサイト上での通知、またはその他の適切な方法によりお客様にお知らせします。** Bambu Labは、Shenzhen Tuozhu Technology Co., Ltd.およびその関連会社の商標です。

ご使用の前に

お客様がBambu Lab製品を安全かつ最大限にご活用いただけるよう、以下のドキュメントをご用意しております。

- 免責事項および安全のためのガイドライン
- クイックスタートガイド

同梱の部品がすべて揃っていることをご確認ください。 製品を操作する前に、クイックスタートガイド全体をお読みください。

上記の「免責事項および警告」をお読みいただき、法的な権利と責任についてご理解ください。 本書の最新版は、Bambu Labの公式ウェブサイト（**https://bambulab.com/support/documentation**）にてご確認いただけます。 本製品の設置、メンテナンス、または使用中にご質問や問題が発生した場合は、Bambu LabまたはBambu Lab正規代理店までお問い合わせください。

安全のためのガイドライン

動作環境

本製品およびそのレーザーシステムを安全かつ正しくご使用いただくため、以下の安全ガイドラインをよくお読みください。

1) 本製品はレーザーシステムを内蔵しているため、ご使用前にレーザー安全指示書、レーザー使用に関する重要情報、およびその他の関連ガイドラインを熟読する必要があります。 操作前にこれらの文書を熟読し、必要なトレーニングを受け、十分な知識と経験を有していることを確認してください。 **トレーニングを受けていない人員は、本製品またはそのレーザーシステムを操作しないでください。** トレーニングの詳細については、Bambu Lab公式Wiki（**wiki.bambulab.com/r1**）をご参照ください。
2) 無許可またはトレーニングを受けていない者による操作が引き起こす人身傷害や物的損害のリスクを軽減するため、安全キーが付属しています。 安全キーは厳重に管理し、責任を持って使用してください。 **レーザー機能を有効にするにはキーを挿入し、無効にするにはキーを抜いてください。**
3) 本製品は、お子様による使用を想定していません。 本機器は、お子様の手の届かない場所に設置および保管してください。 稼働中は、お子様、ペット、および第三者を本機器に近づけないでください。
4) 作業エリアは清潔に保ち、常に整理整頓してください。 本機器を設置する面が安定しており、構造的に堅牢であることを確認してください。
5) 本製品は屋内専用です。 乾燥し、清潔で、換気の行き届いた環境で稼働させてください。 十分な耐荷重を持つ、安定した水平な不燃性の表面に本製品を設置してください。
6) 本機器は、製品仕様に指定されている温湿度範囲内でのみ稼働および保管してください。 結露、霜、過度の湿気、氷点下の温度、または指定された範囲外の条件となる環境では、本製品を稼働させないでくださ

5

© Botland B. Derkacz Sp. K. Copying, modifying or distributing this document in whole or in part without written consent is prohibited.