Go2 Battery and Charger

User Manual V1.0

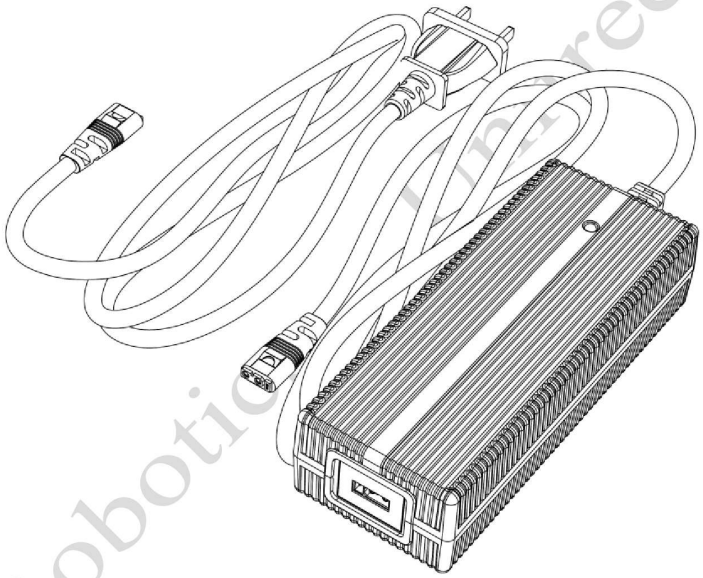

Unitree

This product is a civilian robot. We kindly request that all users refrain from making any dangerous modifications or using the robot in a hazardous manner.

Please visit Unitree Robotics Website for more related terms and policies, and comply with local laws and regulations.

Unitree Robotics

Introduction

The battery is specially designed for Go2 quadruped robot with charge and discharge management function. The battery uses high-performance battery cells and advanced battery management system (BMS) independently developed by Unitree Robotics to provide sufficient power for Go2 quadruped robot. The battery is divided into two versions: BT2-05 (standard) and BT2-06 (long range).

The battery charger is a charging device specifically designed for Go2 batteries, with small size, light weight, and convenient portability, providing stable power to the battery. Battery chargers are divided into two models: standard chargers and fast chargers.

⚠ Before using the battery for the first time, make sure that the battery are fully charged before using at the first time!

Parts Name

Battery:

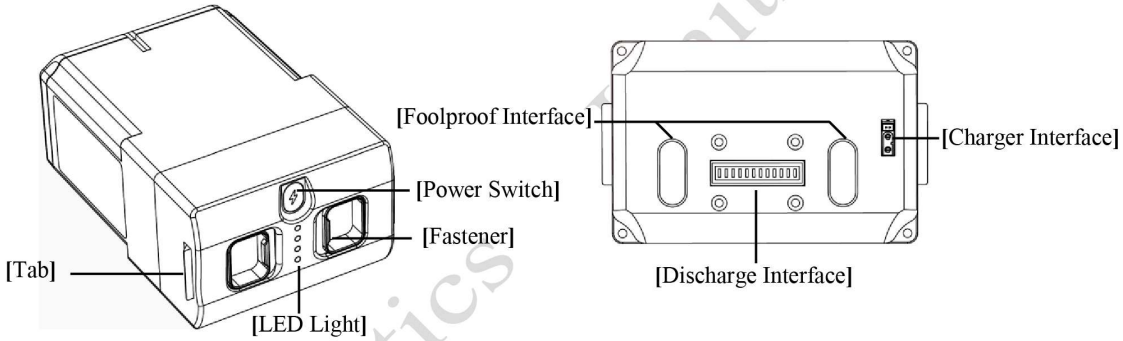

Charger:

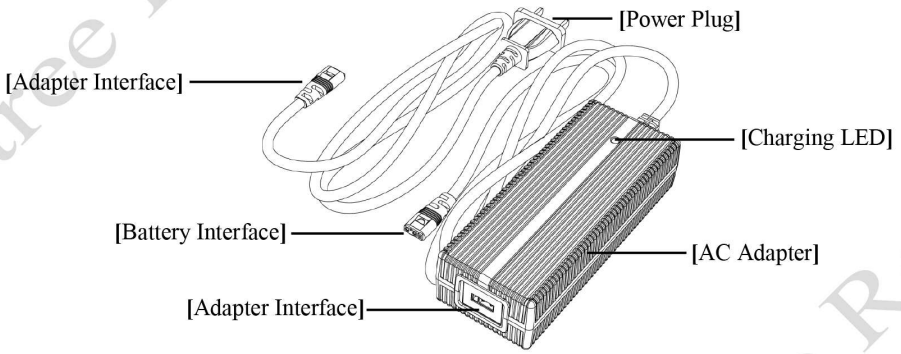

© 2023 All rights reserved, Unitree Robotics

Technical Specification

Battery		
Model	**BT2-05(Convention)**	**BT2-06(Long-endurance)**
Size	120mm*80mm*182mm	120mm*80mm*182mm
Rated Voltage	DC 29.6V	DC 28.8V
Limited Charge Voltage	DC 33.6V	DC 33.6V
Rated Capacity	8000mAh，236.8Wh	15000mAh，432Wh
Executive standards	IS 16046(Part 2)/IEC 62133-2	IS 16046(Part 2)/IEC 62133-2
Running Time	1-2h	3-5h

Charger		
Model	**Charger(standard charge)**	**Charger(quick charge)**
Size	210mm*108mm*48.2mm	154mm*60mm*36mm
Input	100-240V~50/60Hz 4A 350VA	100-240V~50/60Hz 4A 350VA
Output	34.0V,3.5A,119.0W	33.6V,9.0A,302.4W
BT2-05(Convention) Charging duration	2h	0.8h
BT2-06(Long-endurance) Charging duration	4h	1.5h

Battery Function

1) **Power display:** The battery has its own power indicator, which can display the current battery power.

2) **Battery storage self-discharge protection:** The battery will start self-discharge to 65% power to protect the battery when the battery power is higher than 65% without any operation and stored for 10 days. Each self-discharge process lasts about 1 hour. There is no LED light indication during the discharge period. It is a normal phenomenon and that there may be a slight heat.

3) **Balance charging protection:** Automatically balance the voltage of the internal cells of the battery to protect the battery.

4) **Overcharge protection:** Overcharging will seriously damage the battery, and it will automatically stop charging when the battery is fully charged.

5) **Charging temperature protection:** Charging will damage the battery when the battery temperature is below 0°*C* or above 50°*C*, and the battery will lead to abnormal charging.

© 2023 All rights reserved, Unitree Robotics

6) **Charging electric current protection:** High electric current charging will seriously damage the battery. When the charging current is more than 15A, the battery will stop charging.

7) **Over-discharge protection:** Over-discharge will seriously damage the battery. When the battery is discharged to 24V, the battery will cut off the output.

8) **Short circuit protection:** In the event of a short circuit detected by the battery, the output will be cut off to protect the battery.

9) **Battery load detection protection:** When the battery is not inserted into the robot, the battery cannot be turned on. When the turned on battery is removed from the robot, the battery will automatically turn off.

10) **Abnormal charging display:** The battery LED light can display relevant information about battery protection triggered by abnormal charging.

Battery Indicator

When the battery is off, briefly press the battery switch (Key) once to view the current power level.

Be used to display the battery power during the charging and discharging process of the battery. The indicator is defined as follows.

White LED light is constant on | White LED light flashing,2.5HZ | White/red LED light flashing,2.5HZ

Green LED light is constant on | White LED light flashing,2.5HZ | White/red LED light flashing,2.5HZ | LED light is off

Check the power level when shutting down				
LED1	**LED2**	**LED3**	**LED4**	**Current Battery**
●	●	●	●	88%~100%
●	●	●	☼	76%~88%
●	●	●	○	64%~76%
●	●	☼	○	52%~64%
●	●	○	○	40%~52%
●	☼	○	○	28%~40%
●	○	○	○	16%~28%
☼	○	○	○	4%~16%
☼	○	○	○	0%~4%

© 2023 All rights reserved, Unitree Robotics

Power on discharge LED status				
LED1	**LED2**	**LED3**	**LED4**	**Current Battery**
●	●	●	●	88%~100%
●	●	●	☼	76%~88%
●	●	●	○	64%~76%
●	●	☼	○	52%~64%
●	●	○	○	40%~52%
●	☼	○	○	28%~40%
●	○	○	○	16%~28%
☼	○	○	○	4%~16%
☼	○	○	○	0%~4%

Battery Turn on/ Turnoff

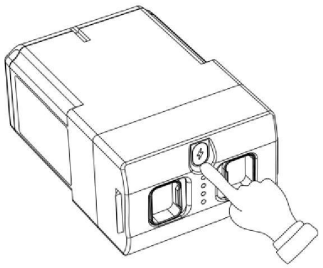

Turn on the battery: In the off state, briefly press the battery switch (Key) once, and then press the battery switch (Key) for more than 3 seconds to turn on the battery. When the battery is turned on, the indicator light is green and the current battery level is displayed.

Turn off the battery: In the ON state, briefly press the battery switch (Key) once, and then press the power switch for more than 3 seconds to turn off the battery. After the battery is turned off, the indicator lights go out.

Force Shutdown

Press and hold the button for more than 15 seconds to forcibly shut down the battery.

Battery Chargin

1) Connect the charger to an AC power source (100-240V, 50/60Hz). It must be ensured that the external power supply voltage matches the rated input voltage of the charger before connecting. Otherwise, the charger will be damaged (the rated input voltage of the charger is marked on the nameplate of the charger).

2) Before charging the battery, ensure that the battery is switched off. Otherwise, the battery and charger may be damaged.

3) The users need to remove the battery from the robot itself when charging the battery.

© 2023 All rights reserved, Unitree Robotics

4) When all the indicator lights are off, it indicates that the battery is fully charged. Please remove the battery and charger to complete charging. You can also check the current charging status through the charger indicator.

5) The temperature of the battery may be high after running, and the battery must be charged after the temperature of the battery has dropped to room temperature.

6) Charging connection diagram:

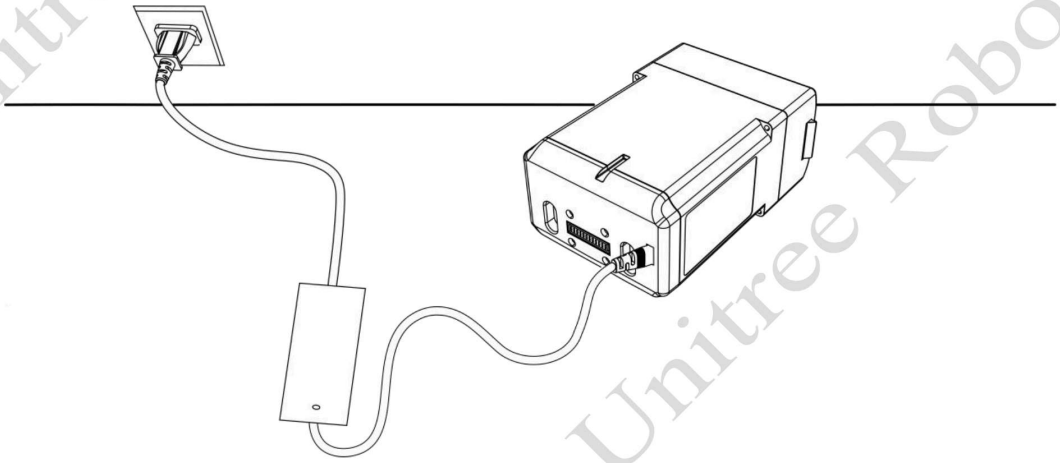

Charging battery indicator: The battery LED light shows the current battery while charging.

Charging Indicator Light				
LED1	**LED2**	**LED3**	**LED4**	**Current Battery**
☀	○	○	○	0%~4%
☀	○	○	○	4%~16%
●	○	○	○	16%~28%
●	☀	○	○	28%~40%
●	●	○	○	40%~52%
●	●	☀	○	52%~64%
●	●	●	○	64%~76%
●	●	●	☀	76%~88%
●	●	●	●	88%~100%
○	○	○	○	Full-Charged

© 2023 All rights reserved, Unitree Robotics

Charging protection indication: The battery LED light can display battery protection information triggered by abnormal charging.

Protection Iindicator Light					
LED1	**LED2**	**LED3**	**LED4**	**Indication**	**Proction Item**
○	☀	○	○	2.5Hz flashing	Excessively Hight/Low Temperature
○	○	☀	○	2.5Hz flashing	Excessively High/Low Voltage
○	○	○	☀	2.5Hz flashing	Over Current/Short Circuit
☀	☀	☀	☀	2.5Hz flashing	Need to use the upper computer to view detailed faults/errors
☀	☀	☀	☀	5Hz flashing	Firmware Update Mode

In the event of a fault (excessive charging electric current, short-circuiting of charging, excessively high battery voltage caused by overcharging, and excessively high charging voltage), the specific cause of the fault can be identified first and can be used again after troubleshooting.

- When the battery firmware is updated, the battery level will be displayed and automatically turned off.
- reasons, the battery needs to be discharged during transportation. The discharge method is divided into active discharge and passive discharge.

1) Active discharge: Install the battery into the robot and run to a lower battery (for exam around 65%).

2) Passive discharge: Battery storage self-discharge protection, please refer to "Battery Function" for detailed description.

© 2023 All rights reserved, Unitree Robotics

Battery Safe Operation Guide

Improper use, charging or storage of batterys may result in fire or property and personal injury. Be sure to use the battery in accordance with the safety instructions below.

Recommended use

1) Make sure the battery has enough battery before each use.

2) When using, moving or charging, please be careful with the battery and charging plug to avoid being damaged by external force.

3) When the power of the battery is lower than 40%, stop using the robot as soon as possible, replace the battery with a new one or charge the battery.

4) It is normal for a battery that has just been used or charged to generate heat.

5) It is forbidden to contact the battery with any liquid. Do not immerse the battery in the liquid or wet it. Short circuit and decomposition reactions may occur when the inside of the battery meets water, which may lead to spontaneous combustion of the battery or even explosion.

6) It is forbidden to use batterys not officially provided by Unitree Robotics. If the users need to replace it, please go to the official website of Unitree Robotics for relevant purchase information. Unitree Robotics is not responsible for battery accidents, operation failures and machine damage caused using batterys not officially provided by Unitree Robotics.

7) It is forbidden to use batterys with damaged packages and shells.

8) Before installing or unplugging the battery from the robot, please keep the power of the battery off. Do not plug and unplug the battery when the power supply of the battery is turned on, otherwise the power supply or the robot may be damaged.

9) The batterys should be used at an ambient temperature of -15°C-55°C. If the temperature is too high (higher than 55°C), the batterys may catch fire or even explode. If the temperature is too low (lower than -15°C), the life span of the battery will be seriously damaged.

10) t is forbidden to use the battery in strong magnetic field or electrostatic environment. Otherwise, the batterys protection board will fail, resulting in the failure of the batterys and the robot.

11) It is forbidden to disassemble or puncture the battery in any way.

12) If the battery is seriously impacted by external forces, it cannot be used again until it is delivered to Unitree Technology for official inspection.

13) If the battery is on fire, use solid fire extinguishers. It is recommended to use fire extinguishers in the following order: sand, fire blanket, dry powder, and carbon dioxide extinguishers.

14) Do not place the battery in the pressure cooker or microwave oven.

15) Do not place the battery on the conductor plane.

16) Do not use any conductive material (such as wire or other metal objects) to short the positive and negative terminals of the battery.

© 2023 All rights reserved, Unitree Robotics

17) Do not hit the battery. Do not place heavy objects on the battery or charger.

18) If there is dirt on the battery interface, please use a clean and dry brush, toothpick, or dry cloth to clean it. Otherwise, poor contact may be caused, resulting in energy loss or failure to charge.

Carge

1) The battery will automatically stop charging when fully charged. It is recommended to disconnect the charger after the battery is fully charged.

2) Please make sure that the battery is turned off before plugging in the charger.

3) When charging the battery, please ensure that the battery is charged within sight to prevent unpredictable accidents.

4) When charging, please pay attention to ensure that the environment around the battery has good heat dissipation, and there are no flammable and explosive items such as sundries.

5) Please keep the intelligent battery closed when charging.

6) The intelligent battery must be charged with a special charger officially provided by Unitree Robotics. Unitree Robotics will not be responsible for all the consequences caused by using a charger not officially provided by Unitree Robotics.

7) When charging, please place the battery and charger on the cement floor and other surrounding areas without flammable and combustible materials. Please pay attention to the charging process to prevent accidents.

8) It is forbidden to charge the battery immediately after the robot runs. At this time, the battery is in a high temperature state, and forced charging will seriously damage the life of the battery. It is recommended to wait for the battery to cool to room temperature before charging. The ideal charging ambient temperature (5°C -40°C) can greatly prolong the service life span of the battery.

9) After charging, please disconnect the charger from the battery. Regularly check and maintain the charger, and regularly check the appearance of the battery and other components. Never use alcohol or other combustible agents to clean the charger. Do not use a damaged charger.

Storage and transportation

1) When the battery is not in use, please remove the battery from the robot and store it out of the reach of children.

2) It is forbidden to place the battery near a heat source, such as a car in direct sunlight or hot weather, a fire source, or a heating furnace. The ideal storage temperature of the battery is 22°C -28°C.

3) During storage, please pay attention to ensure that the surrounding environment of the battery has good heat dissipation and is free of sundries and other inflammables and explosives.

4) The environment where the battery is stored shall be kept dry. Do not place the battery in water or where water may leak.

5) It is forbidden to mechanically impact, crush or pierce the battery. It is forbidden to drop or artificially short circuit the battery.

© 2023 All rights reserved, Unitree Robotics

6) It is forbidden to store or transport the battery together with glasses, watches, metal necklaces, hairpins, or other metal objects.

7) Do not transport damaged batterys. Once the battery needs to be transported, be sure to discharge the battery to about 65% charge.

8) Do not store the battery for a long time after it is completely discharged to avoid the battery entering the state of over-discharge, which may cause damage to the battery cell and cannot be restored to use.

Battery Maintenance

1) Do not use the charger to charge the battery in an environment where the temperature is too high or the temperature is too low.

2) Do not store the battery in an environment where the room temperature exceeds 40 °C.

3) Do not overcharge the battery, otherwise it will cause damage to the battery core.

4) If you do not use the battery for a long time, please check the remaining battery power regularly. If the battery is lower than 30%, please charge the battery to 70% before saving. In order to avoid battery over-discharge and damage the battery.

Abandonment

Damaged batteries such as bulging, falling, water ingress and breakage shall be scrapped and shall not be used again to avoid safety risks. Be sure to completely discharge the battery before placing it in the specified battery recycling box. Batterys are hazardous chemicals, which are forbidden to be discarded in ordinary garbage cans. For details, please follow local laws and regulations on battery recycling and disposal.

Unitree Robotics

© 2023 All rights reserved, Unitree Robotics

Warnings and safety information
All information regarding handling and use can be found in the operating instructions or on the product label. Before using the product, read its contents and follow the instructions contained therein.
Also read the following information before use:
Safety of use
1. Use the charger for its intended purpose - Chargers are designed to charge specific devices such as phones, tablets, batteries or wireless devices. Using the charger for other purposes may result in damage to the charger or damage to the devices being charged.
2. Check the condition of the charger before use - Make sure the charger has no visible damage such as cracks, abrasions, damaged plugs or cords. A damaged charger can lead to a short circuit or overheating, which is dangerous.
3. Compatibility with your device - Make sure the charger is compatible with the device you wish to charge. Only use the correct charger for your device, according to its technical specifications.
Precautions
1. Protect your charger from moisture - Chargers, especially car and mains models, are not resistant to water or moisture. Avoid using them in damp environments or being exposed to water.
2. Avoid overloading power sockets - When plugging a charger into an outlet, make sure that you do not overload the electrical system. Overloading can cause a short circuit or overheating.
3. Protect the charger from overheating - When using the charger, make sure it is properly ventilated and not exposed to overheating. Overheating of the charger can lead to damage to the charger and can also be a fire hazard.
Safe use
1. Do not leave the charger unattended - Never leave the charger unattended while it is charging your device. Always check the charging status to avoid overloading or overheating.
2. Protect the charger from mechanical damage - Chargers, especially wireless models, should be stored in a way that prevents them from mechanical damage, such as being crushed, lost or dirty.
3.
Rules for use under appropriate conditions
1. Use the charger at suitable temperatures - Avoid using chargers in areas with extreme temperatures, as these can affect the performance and safety of the device.
2. Don't expose the charger to strong vibrations - For car chargers, avoid exposure to strong vibrations that can damage the equipment.
3. Charge in a dry place - For wireless chargers in particular, make sure the surface on which the charger is operating is dry and clean to ensure proper charging.
Maintenance instructions
1. Regularly check the condition of the cable and plug - Regularly check the condition of the charger cables and plugs. Make sure they are not damaged or worn out. A damaged cable can lead to a short circuit or poor charging quality.
2. Cleaning the charger - Clean the charger regularly, removing dust, dirt and other debris. Use a soft, dry cloth for this. Avoid using damp cleaners.
3. Checking the supply voltage - Make sure that the supply voltage to which you connect the charger is compatible with its requirements. A voltage that is too high or too low can damage the charger, or the device.
Safe disposal
1. Disposal of damaged chargers - Dispose of used or damaged chargers in accordance with current electronics recycling regulations.
2. Recycling materials - Many charger components, such as plastic housings, metal connectors and cables, are recyclable. Contact your local recycling centres to find out how to properly dispose of your used device.
3. Do not dispose of the charger in normal waste containers - Contact electronic waste collection points that recycle these types of devices.
Declaration of conformity
The products have been designed in accordance with the safety requirements of Regulation (EU) 2023/988 on general product safety, ensuring their compliance with the applicable standards for the safety and health protection of users.

EU REP:
QUADRUPED Robotics GmbH
Ringstrasse 66, 51371 Leverkusen, Germany
e-mail: info@quadruped.de