Bambu Lab P1S AMS Combo

Quick Start Guide

Please review the entire guide before operating the printer.

Safety Notice: Do not connect to power until assembly is complete.

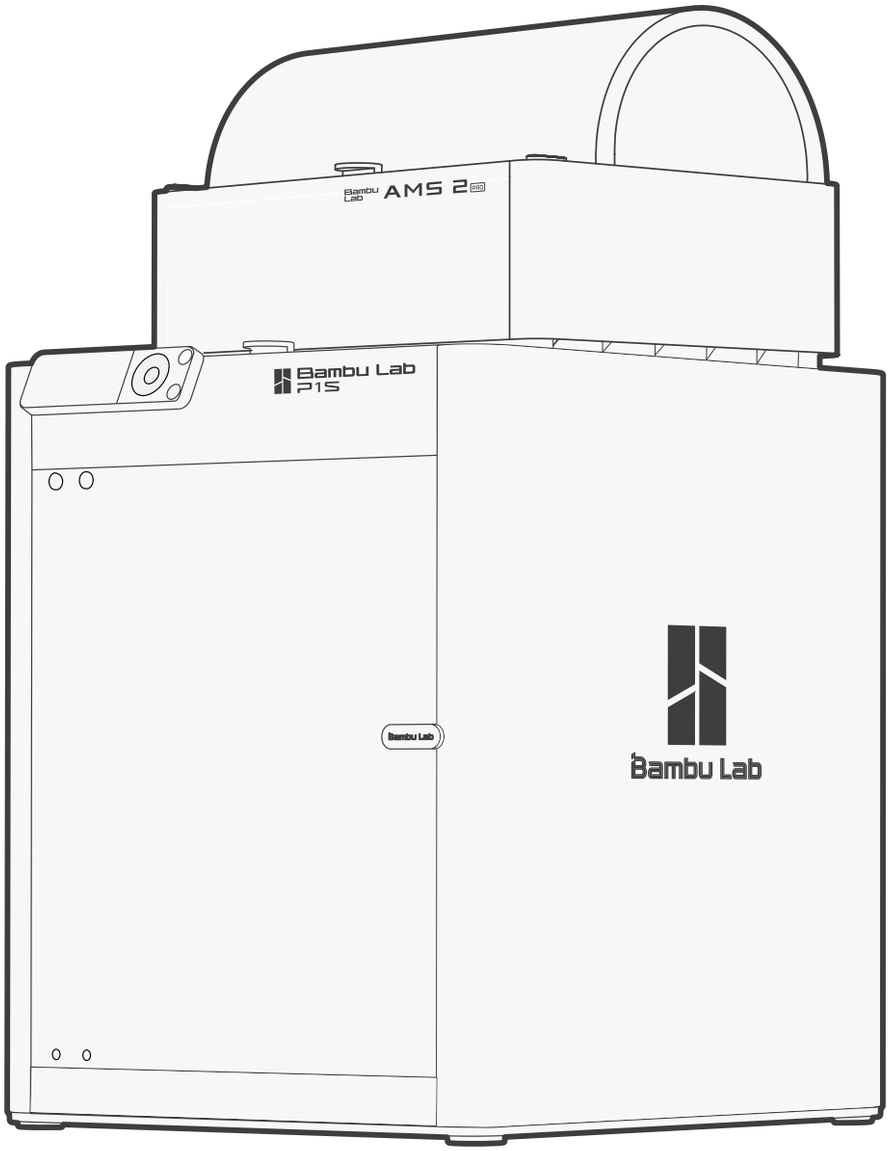

PF001-U I SA007

Video Guide
Scan the QR code to watch a step-by-step video and get started quickly.
bambulab.com/support/unboxing

Download Bambu Handy and Bambu Studio
Scan the QR code to download Bambu Handy, or visit the link below to download Bambu Studio. You can remotely control your printer and monitor your prints in real time on both your phone or computer.
bambulab.com/download

Explore more cool models
Scan the QR code to visit MakerWorld, our models community, where you can find a variety of free models, and quickly bring your ideas to life using the creativity tools in MakerLab and accessories in Maker's Supply.
makerworld.com

Learn with Bambu Academy
Scan the QR code to visit Bambu Academy and explore printer and software courses from beginner to advanced levels to enhance your 3D printing skills.
bambulab.com/support/academy

Table of Contents

Read before use..... 3

Printer component introduction..... 4

AMS 2 Pro component introduction..... 7

Included accessories..... 8

Unlock AMS 2 Pro..... 9

Unlock toolhead..... 13

Place desiccant..... 14

Assemble AMS 2 Pro..... 15

Assemble spool holder..... 17

Unlock heatbed..... 19

Install screen..... 20

Bind the printer - Bambu Handy..... 22

Bind the printer - Bambu Studio..... 23

First print with the AMS 2 Pro..... 24

Printer specifications..... 26

AMS 2 Pro specifications..... 29

Technical support..... 30

Read before use



- For best results, we recommend using Bambu filaments, which have been rigorously tested for compatibility, safety, and stability with the product.
- To prevent the filament from getting stuck, do not use flexible filaments such as TPU with a hardness level of 95A or lower, or damp PVA and BVOH, in the AMS 2 Pro.
- The AMS 2 Pro supports a spool width between 50 mm to 68 mm and a diameter between 197 mm to 202 mm. We recommend using plastic spools.
- If using P1 series printers with one or more AMS 2 Pro units, each unit requires an official Bambu Lab power adapter to power the drying function. Otherwise, the AMS 2 Pro drying function will not be available.
- During the filament drying process, the AMS 2 Pro removes moisture through external air circulation via the air inlets. Please ensure the air intake and vent are not blocked, to ensure optimum drying efficiency.

Printer component introduction

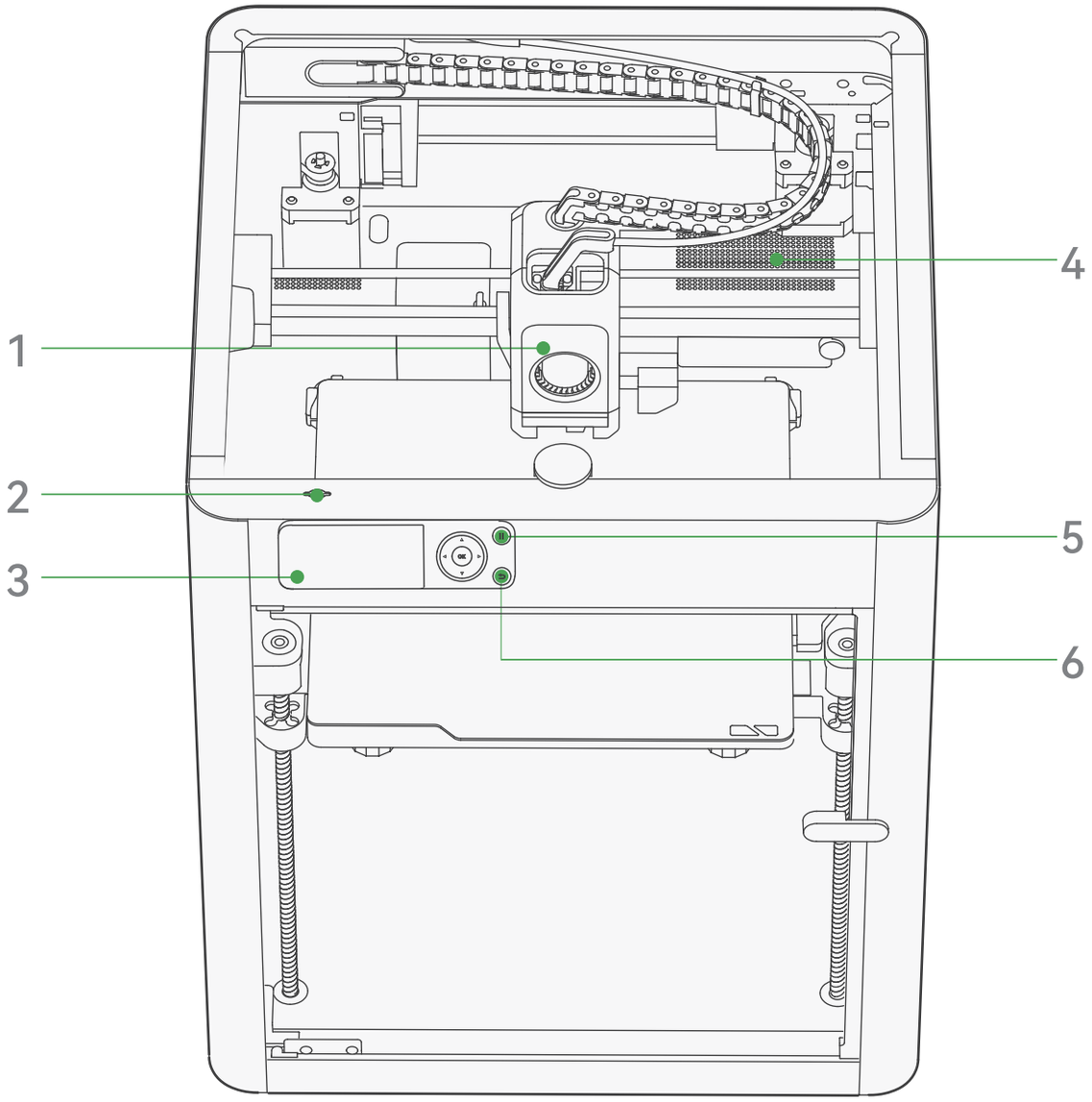

No.	Name	No.	Name	No.	Name
1	Toolhead	2	Micro SD Card	3	Screen
4	Air Filter	5	Pause	6	Back

Printer component introduction

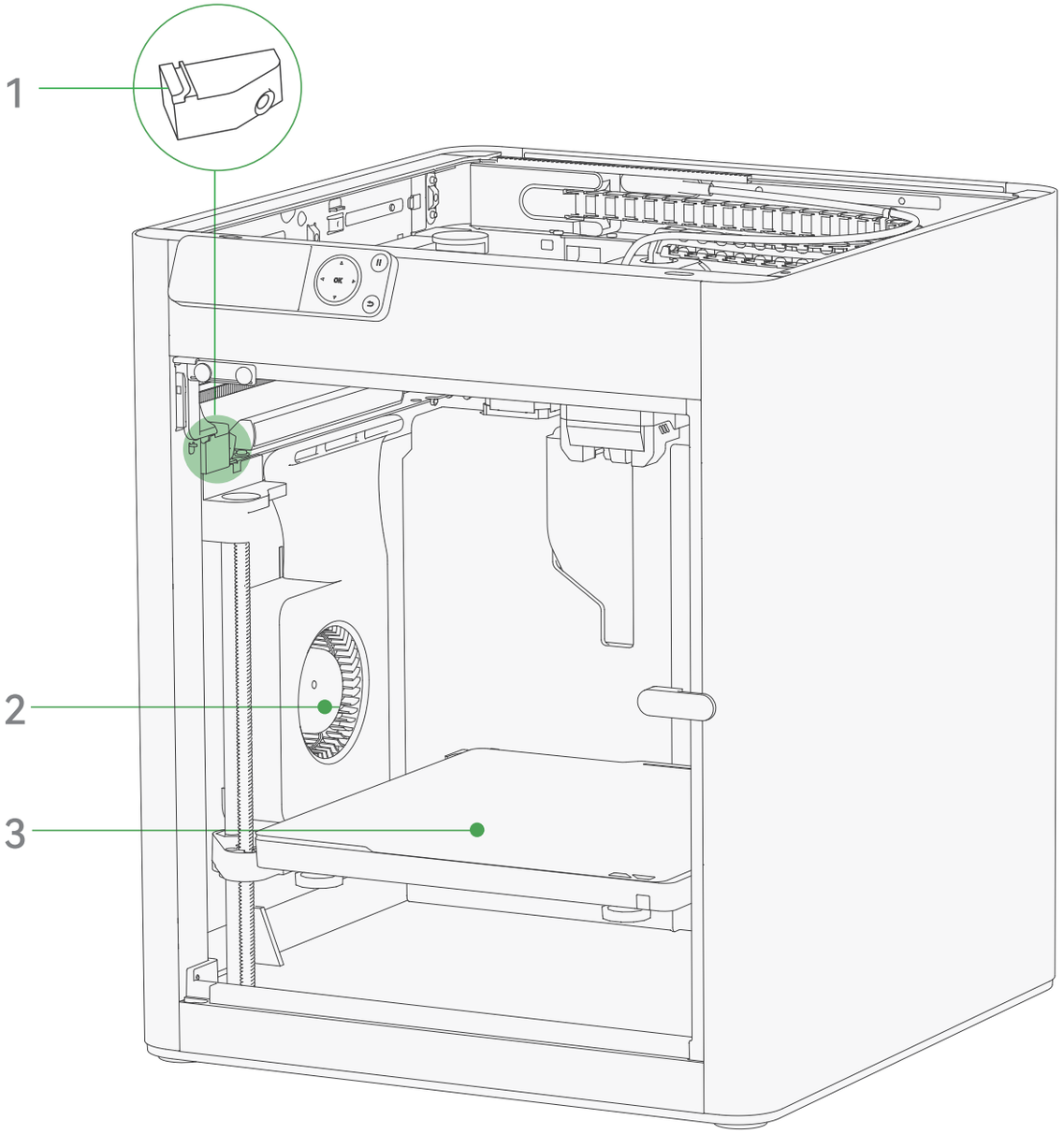

No.	Name	No.	Name	No.	Name
1	Chamber Camera	2	Auxiliary Part Cooling Fan	3	Build Plate

Printer component introduction

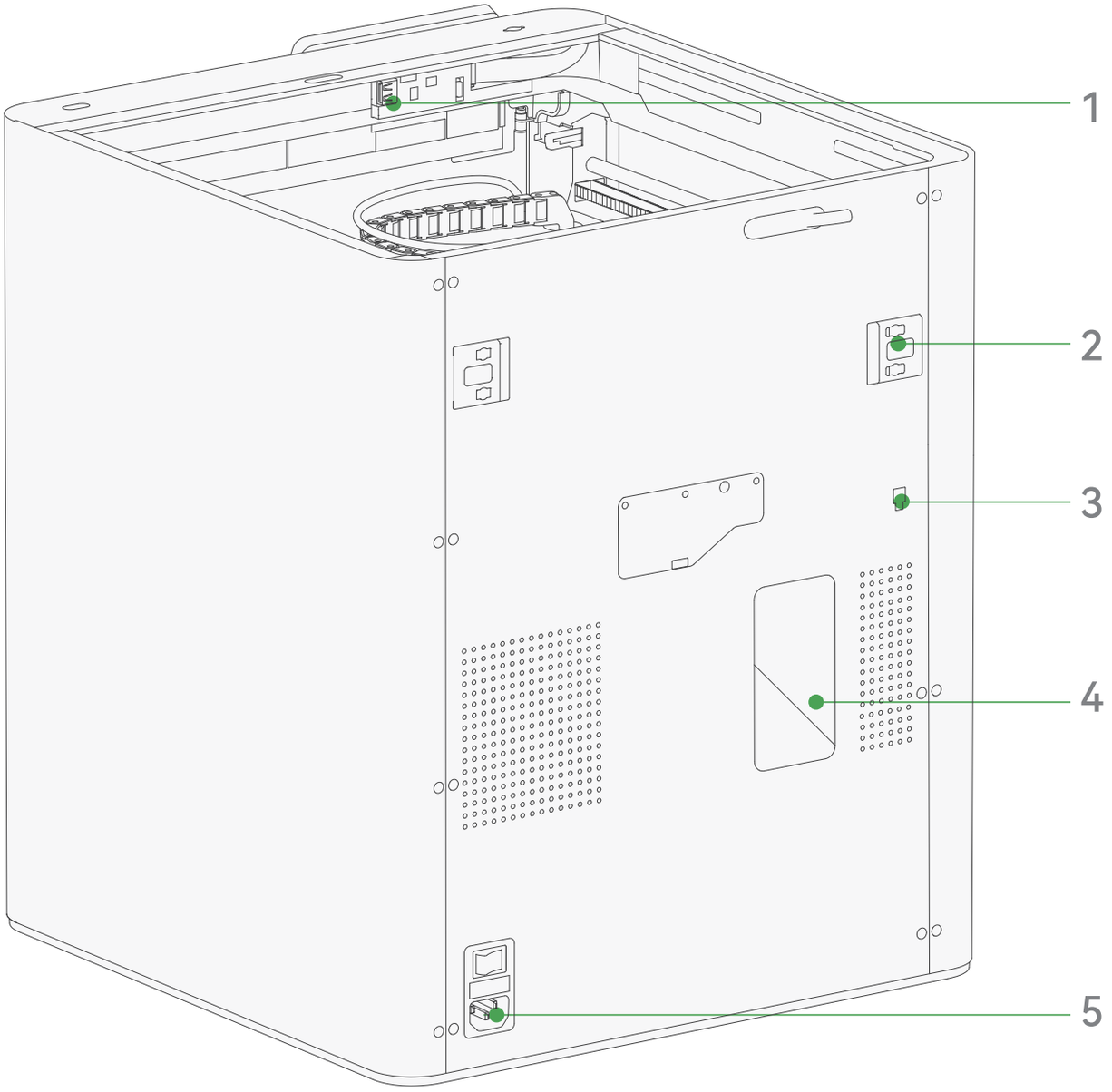

No.	Name	No.	Name	No.	Name
1	USB Charging Port	2	Belt Tensioner	3	Bambu Bus Port 4-pin
4	Purge Chute	5	Power Socket	/	/

AMS 2 Pro component introduction

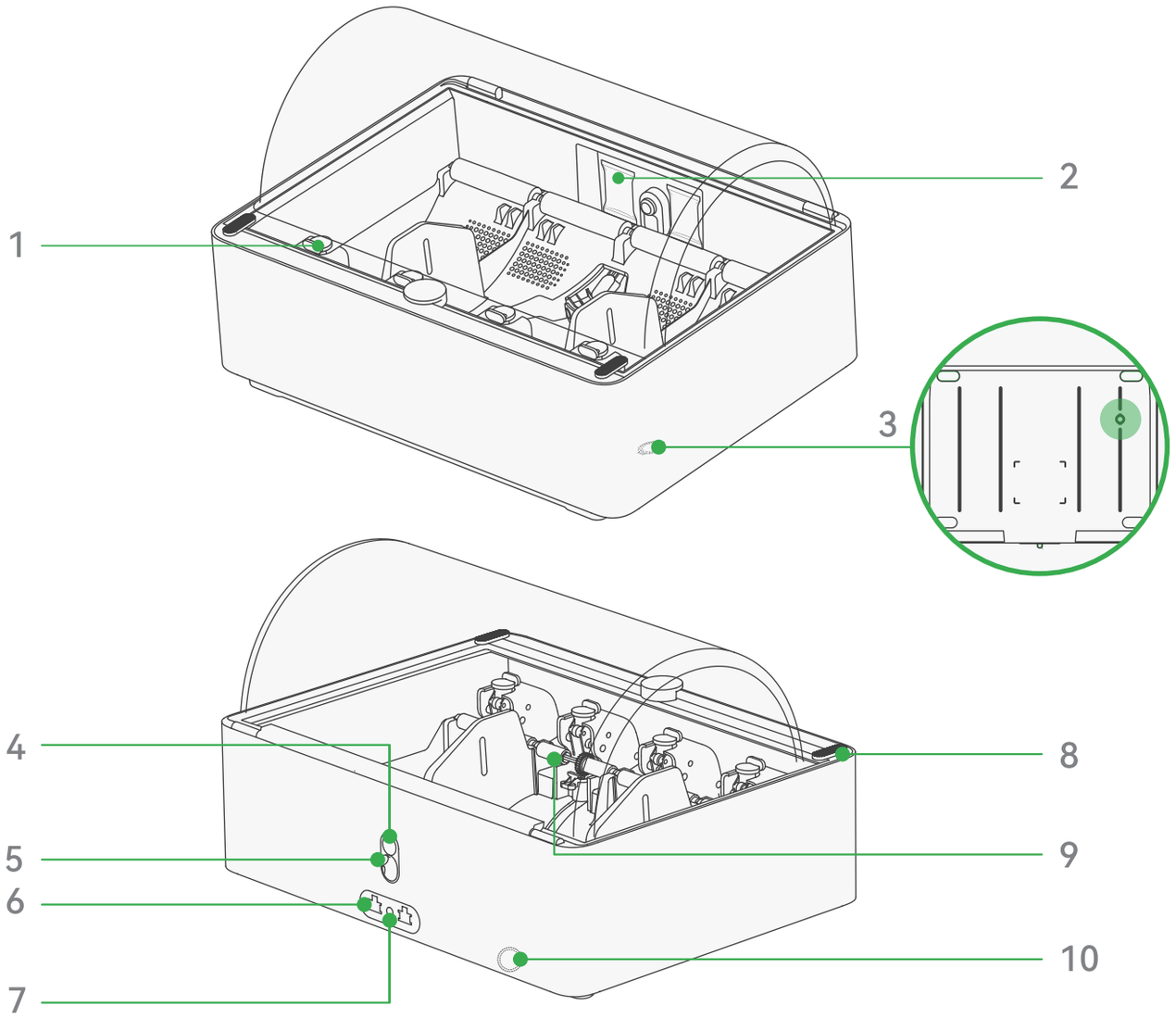

No.	Name	No.	Name	No.	Name
1	Filament Inlet	2	Desiccant	3	Air Intake
4	PTFE Tube Release Button	5	Filament Outlet	6	Bambu Bus Port 6-pin
7	Power Connector	8	Locking Tab	9	Active Support Shaft
10	Air Vent	/	/	/	/

Included accessories

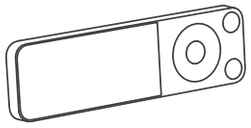

Screen

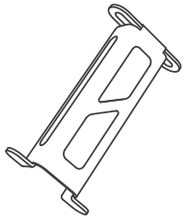

Spool Holder

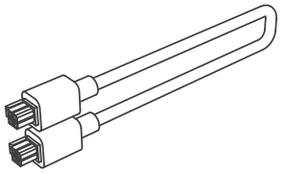

Bambu Bus
Cable 4-pin

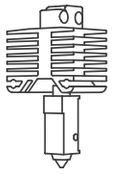

Spare Hotend



Nozzle
Wiping Pad

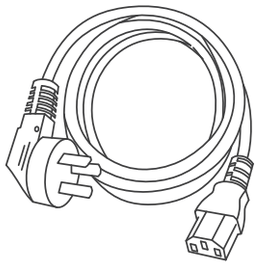

Power Cord

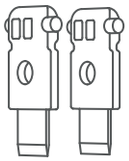

Spare Filament
Cutter

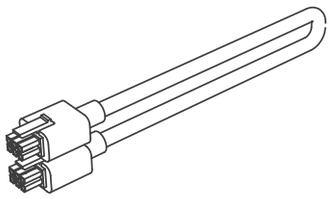

Bambu Bus
Cable 6-pin

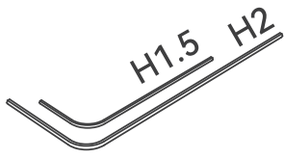

Allen Key H1.5
Allen Key H2.0

Unclogging Pin

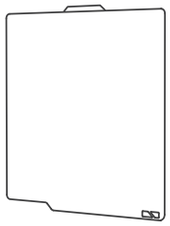

Build Plate
(Pre-installed)

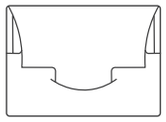

Bambu
Scraper Blade

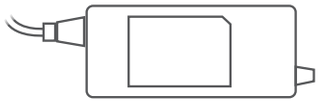

AMS 2 Pro
Power Cord

Unlock AMS 2 Pro

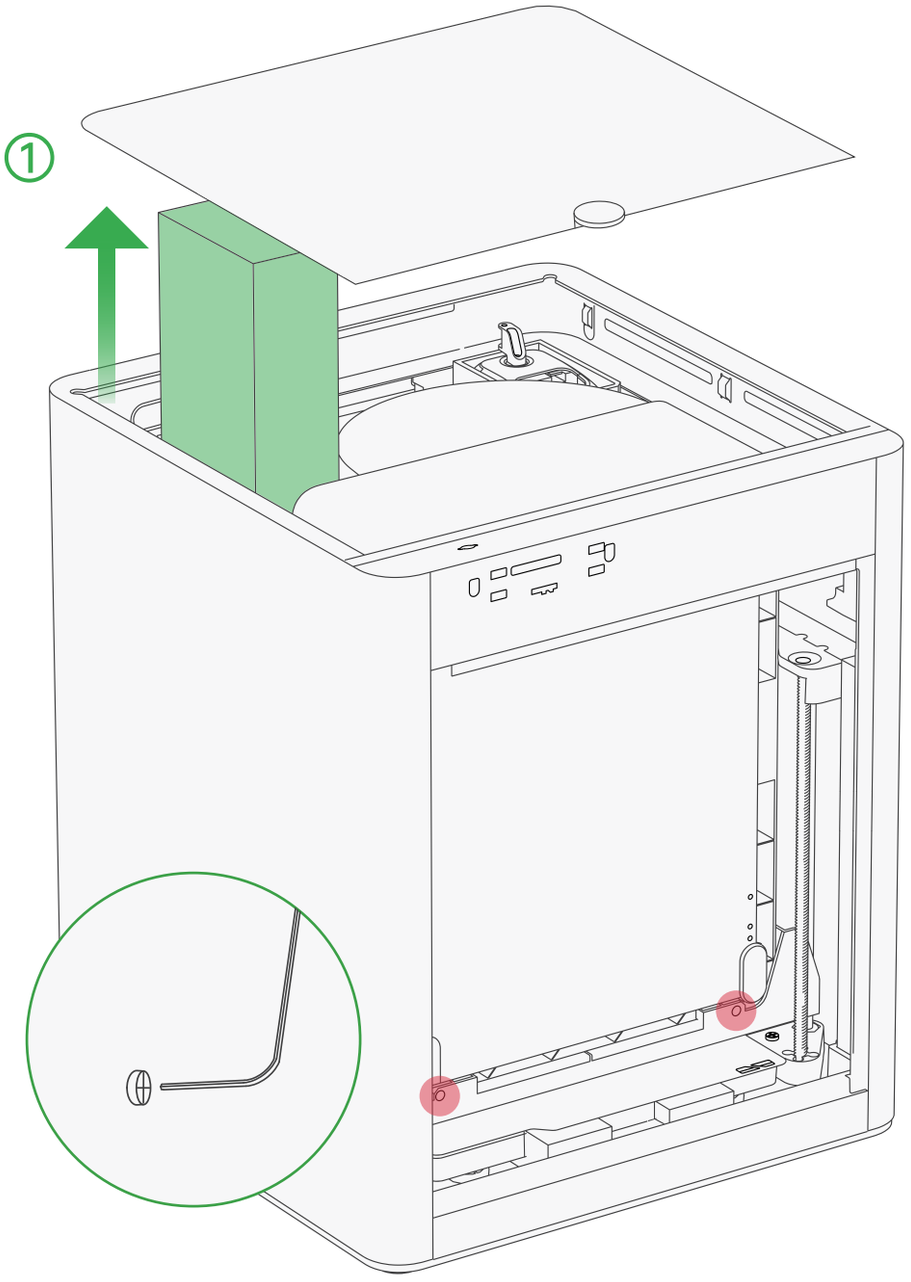

1. Take out the accessory box. Then, use the short end of the allen key H2.0 to remove the screws highlighted in the picture.

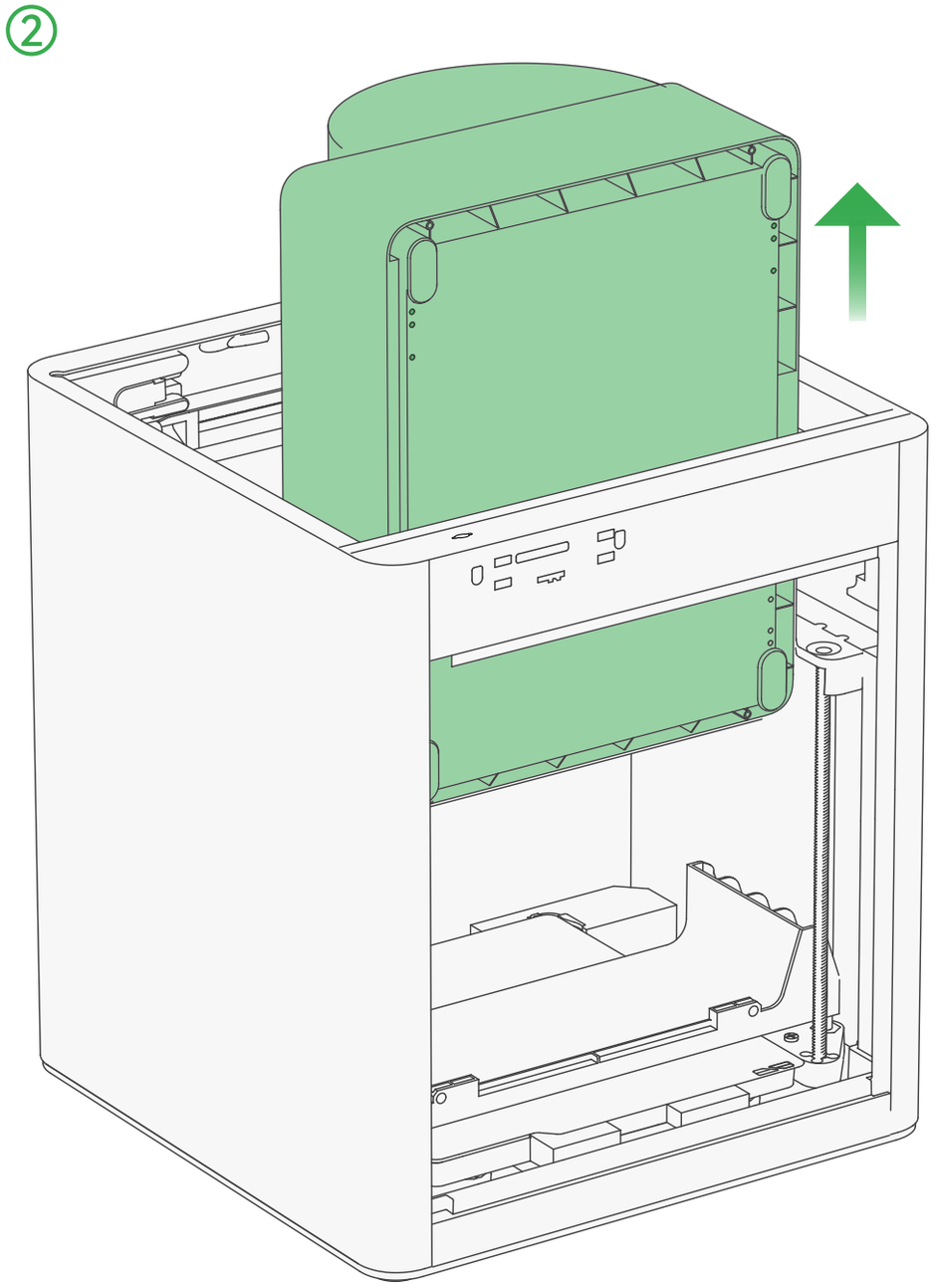

2. Take out the AMS 2 Pro by sliding it out through the top.

③

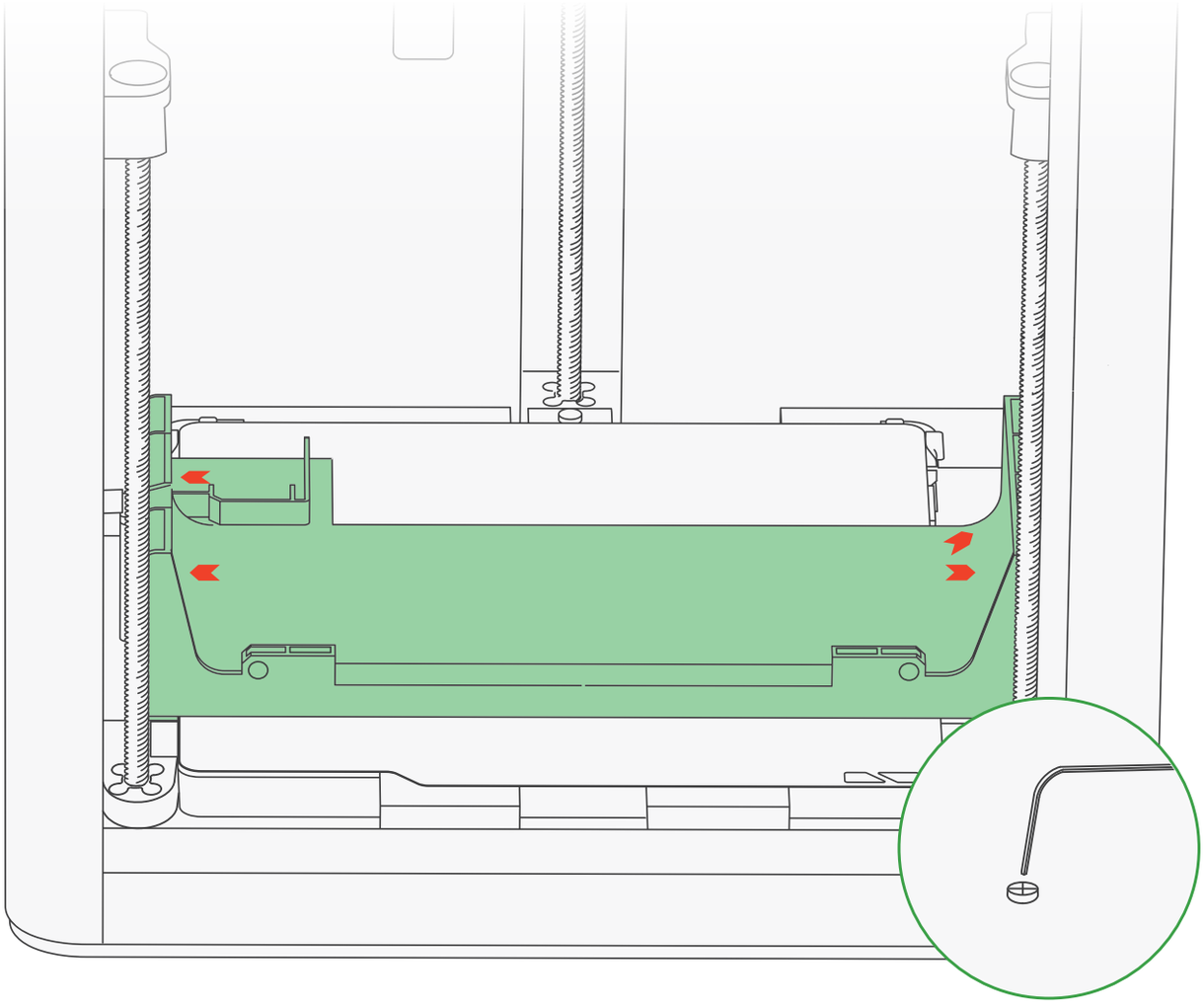

3. Remove the 4 screws indicated by red arrows.

④

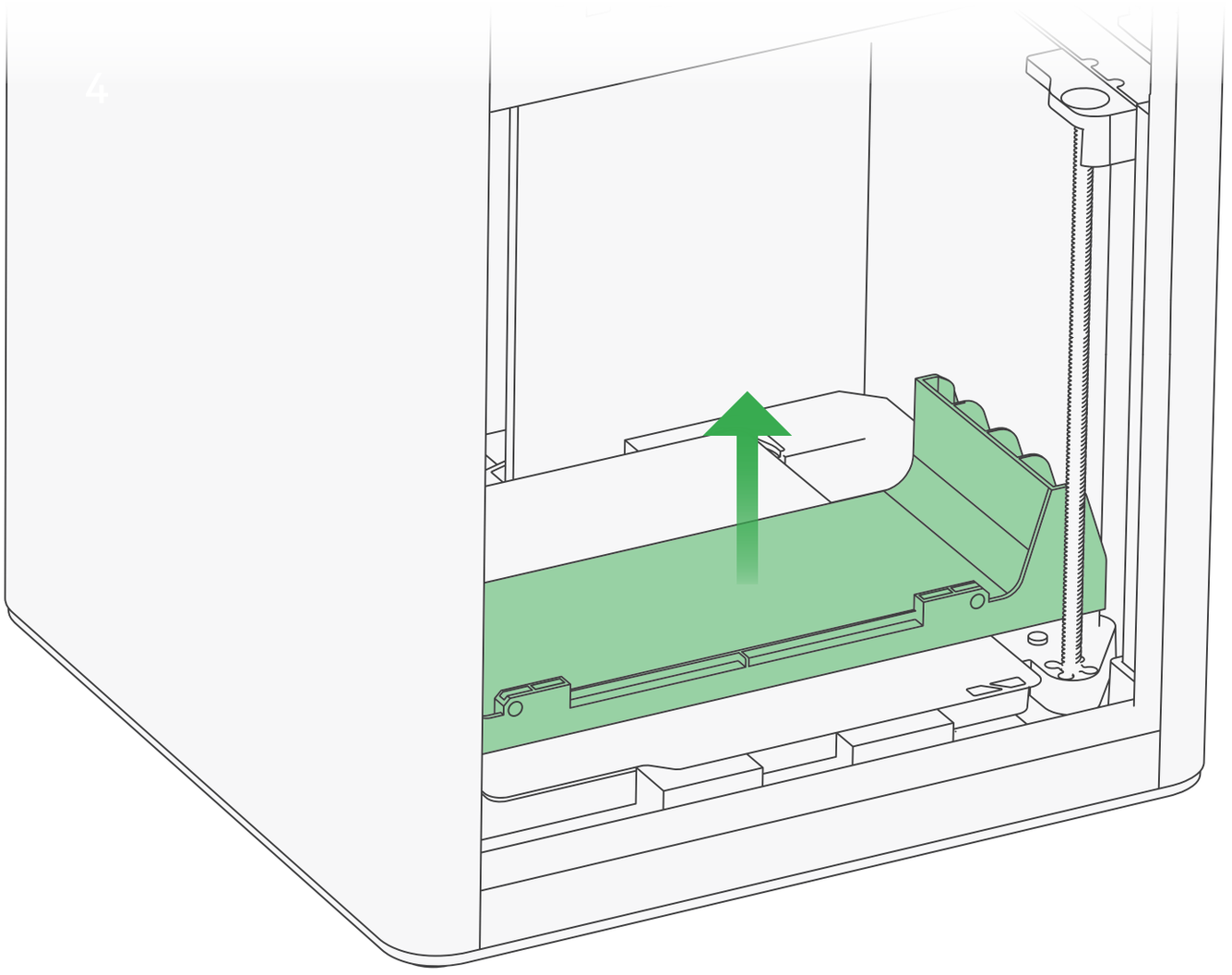

4. Take out the AMS 2 Pro bottom fixture.

Unlock toolhead

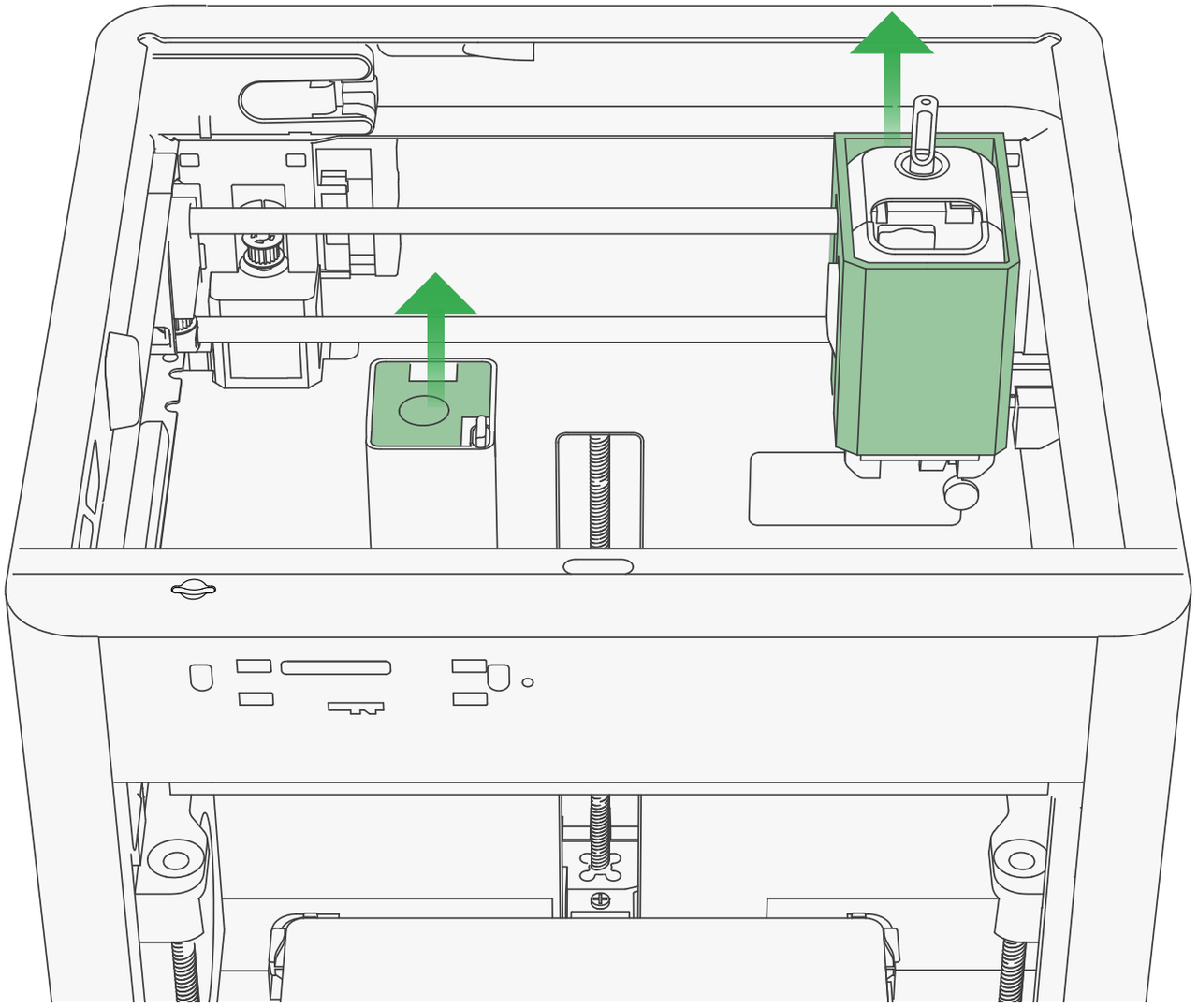

Remove the cardboard from the toolhead, and the foam from the purge chute.

Place desiccant

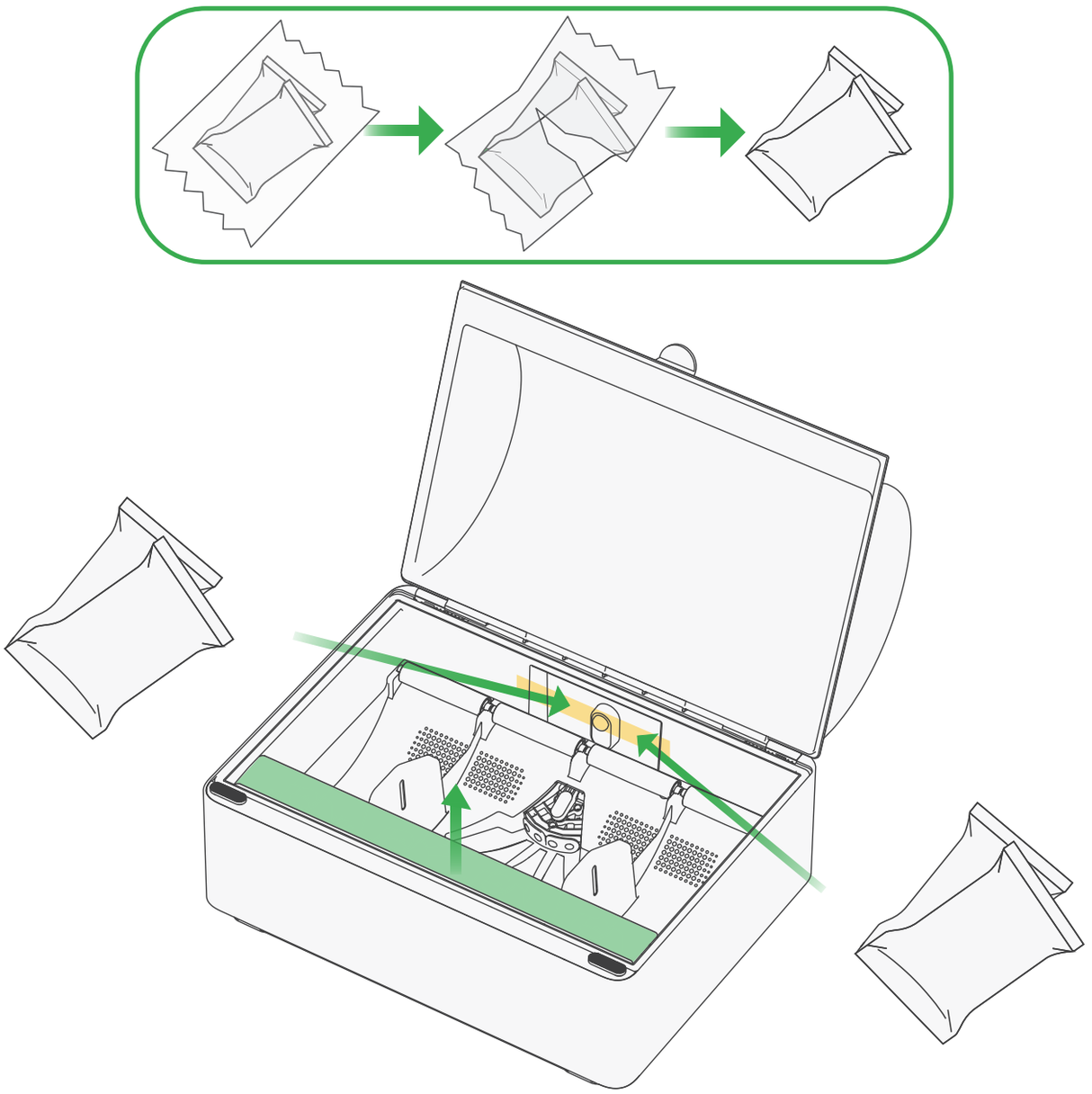

1. Take out the accessories in the AMS 2 Pro.
2. Remove the foam from inside the AMS 2 Pro.
3. Remove the tape from the back of the AMS 2 Pro and take out the desiccant packs. Then, remove the outer plastic packaging. Install 2 desiccant packs on each side of the empty compartment.

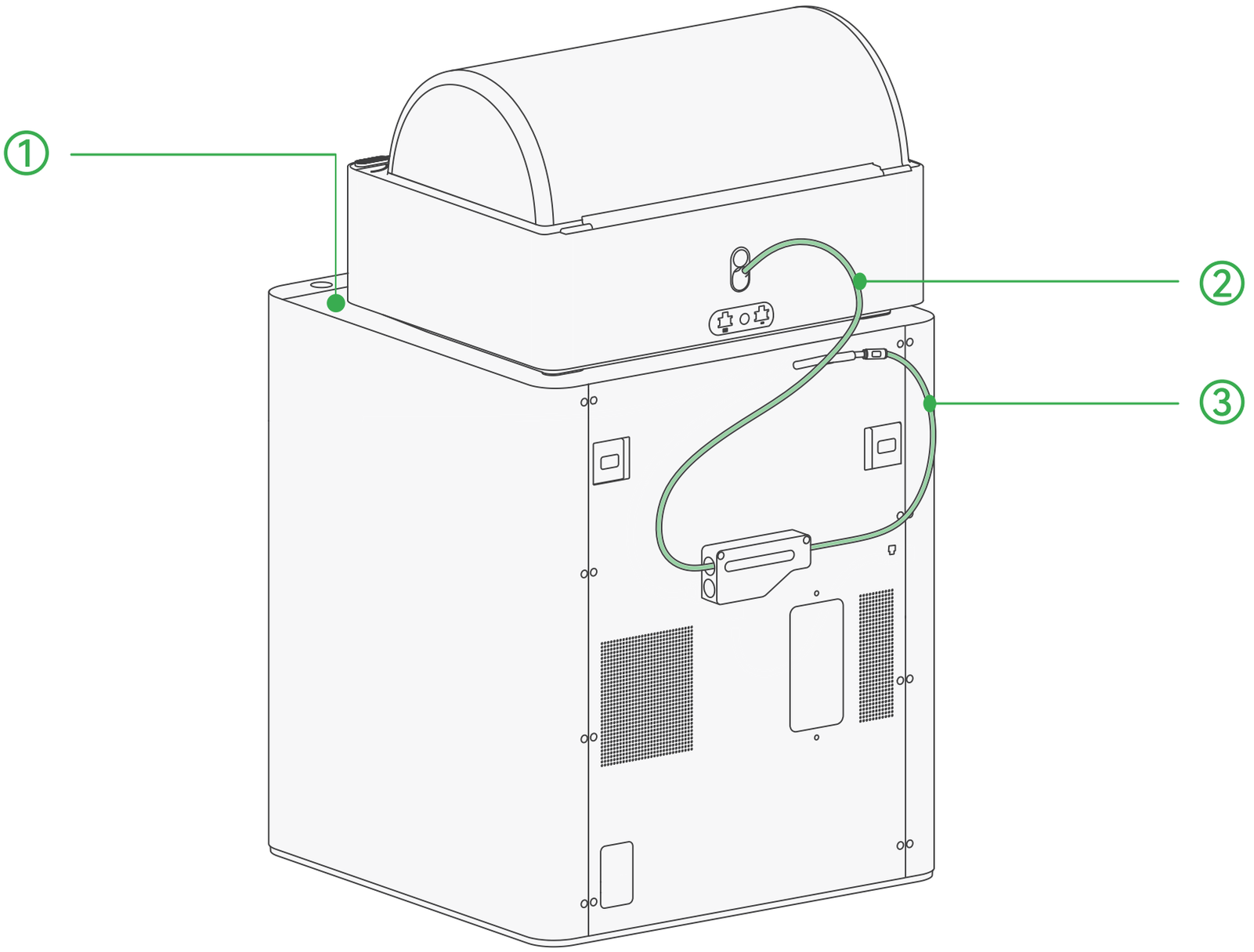

1. Place the top glass cover on top of the printer.
2. Insert one end of the 550 mm PTFE tube to the filament outlet of the AMS 2 Pro, and the other end to the left of the filament buffer.
3. Insert one end of the 370 mm PTFE tube to the PTFE tube coupler of the printer, and the other end to the right of the filament buffer.

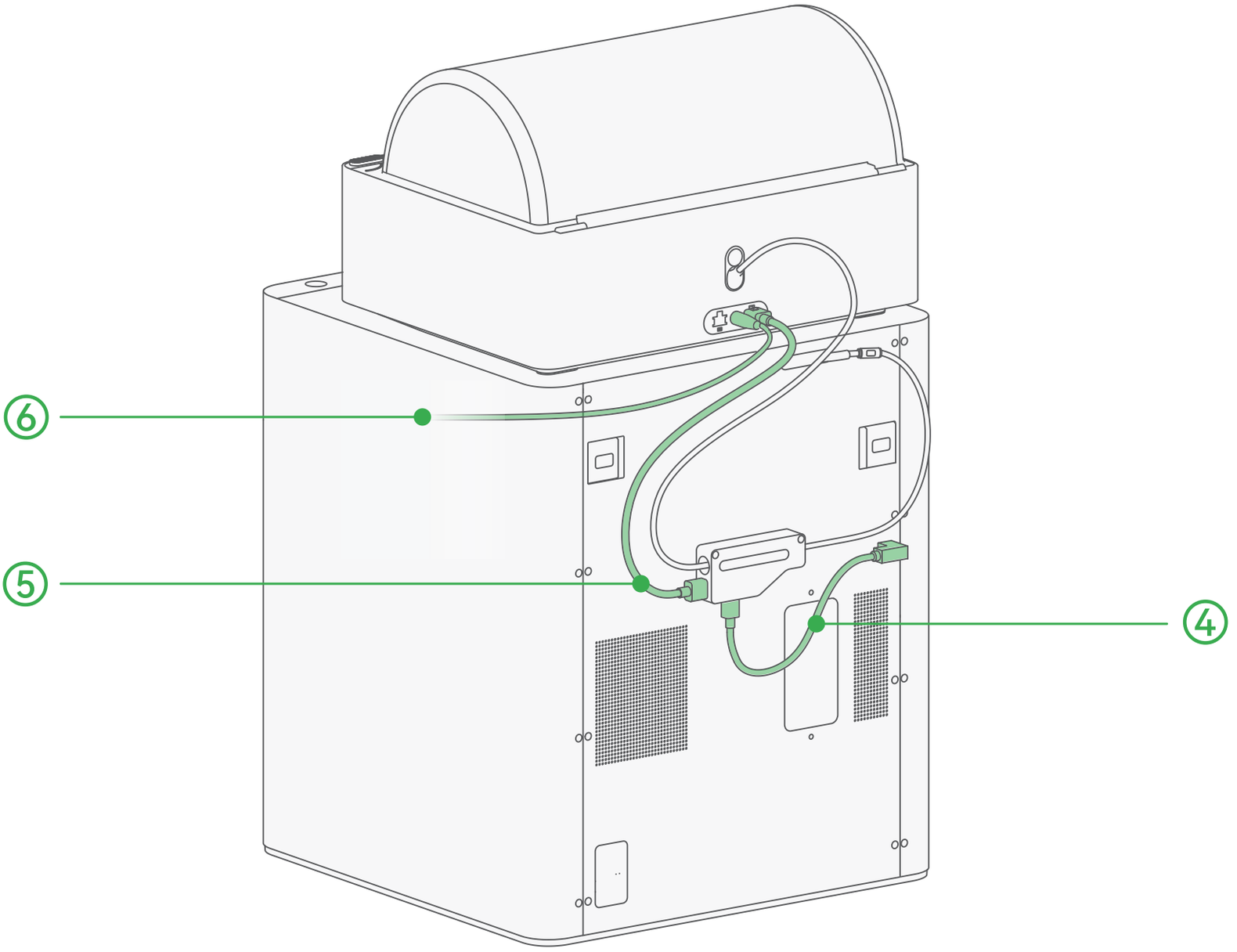

4. Connect the L-shape end of the Bambu Bus cable 4-pin to the printer, and the other end to the bottom of the filament buffer.
5. Connect one end of the Bambu Bus cable 6-pin to either 6-pin port of the AMS 2 Pro, and the other end to the left of the filament buffer.
6. Connect the 24V 4A power supply to the power connector of the AMS 2 Pro.

Assemble spool holder

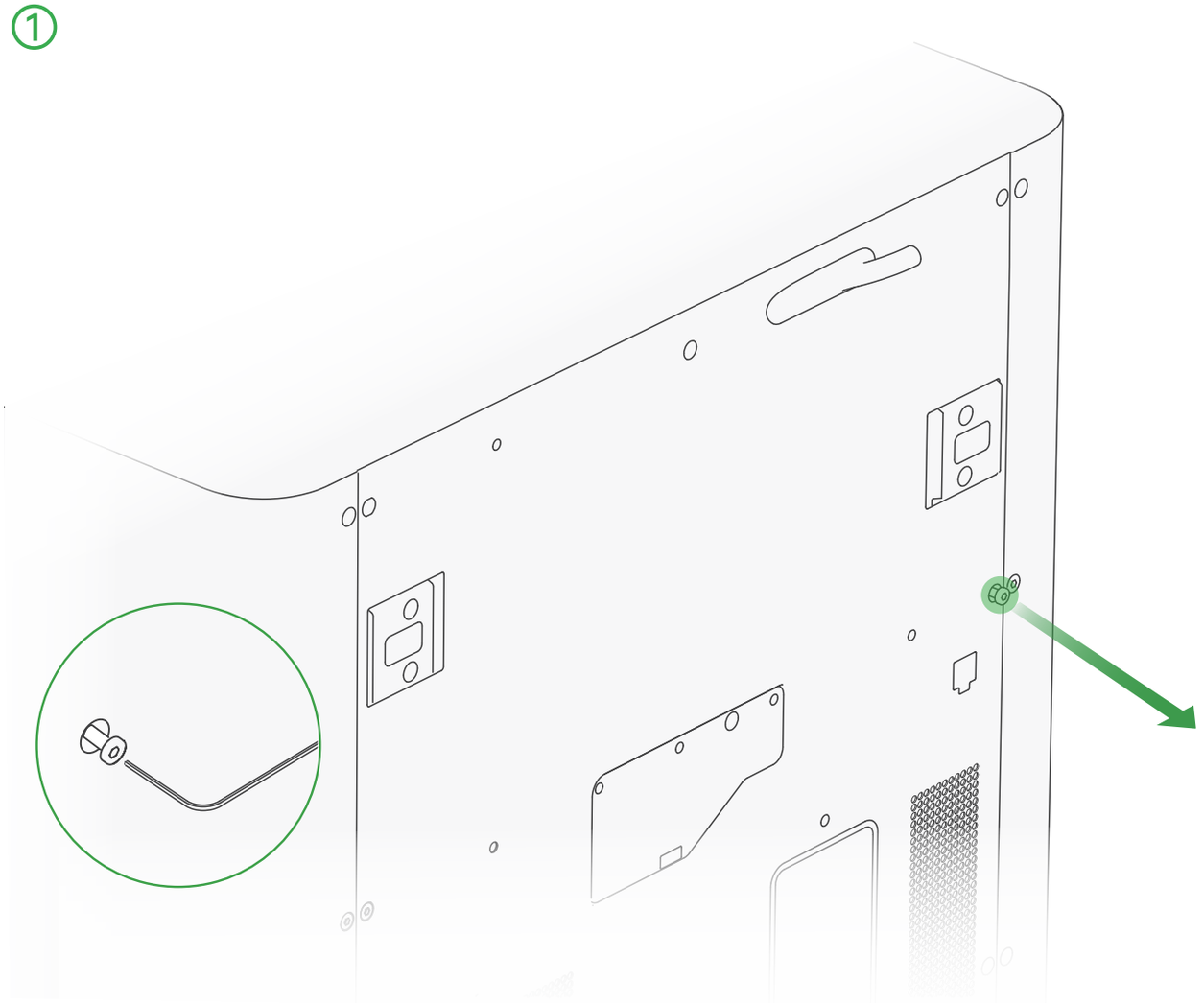

1. Use the allen key H2.0 to remove the screw highlighted in green.

Assemble spool holder



2. Secure the spool holder with 2 screws from the accessory box.

Unlock heatbed

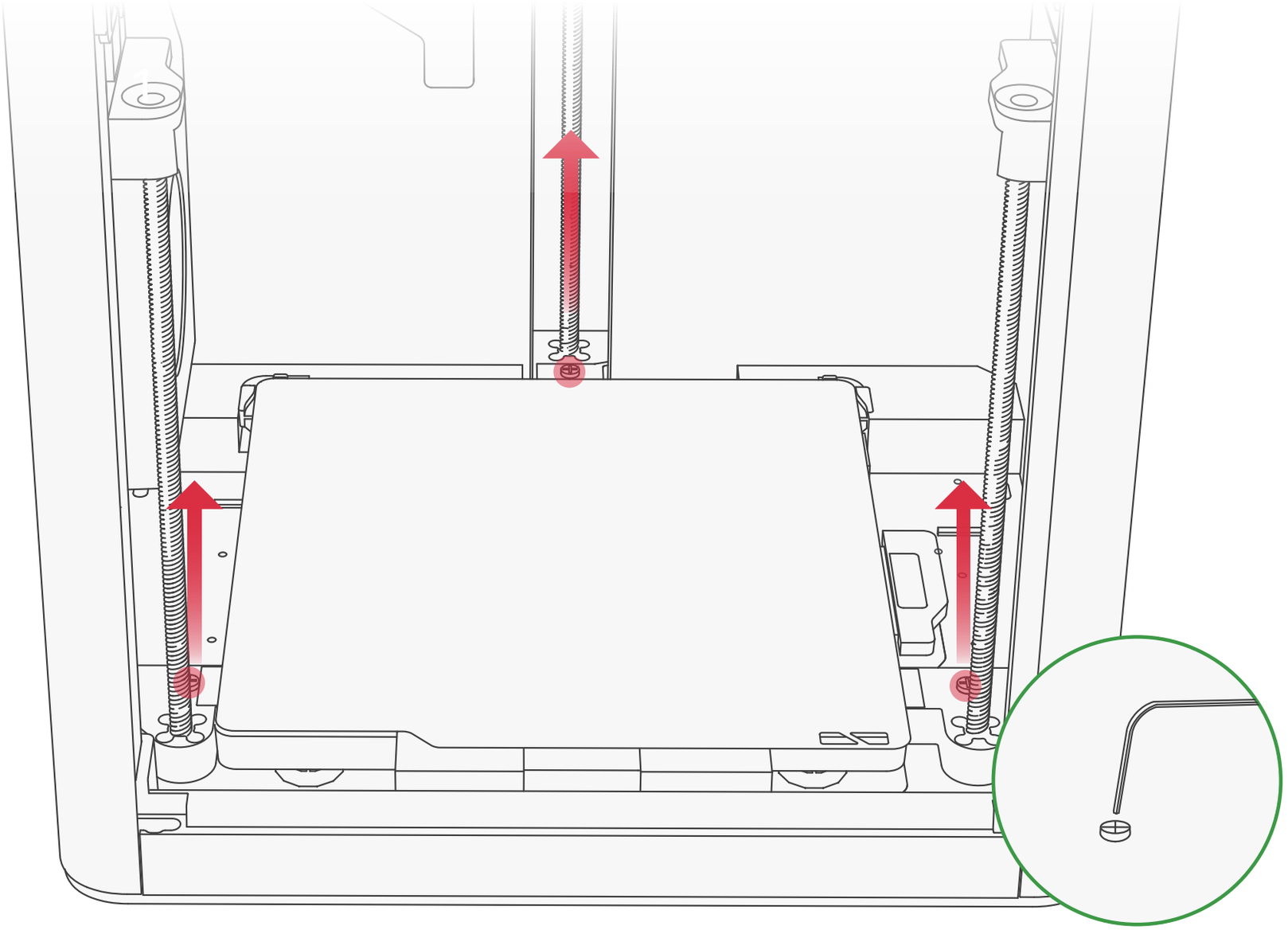

Use the allen key H2.0 to remove the 3 screws to unlock the heatbed.
The foam under the heatbed should be removed after calibration.

Install screen

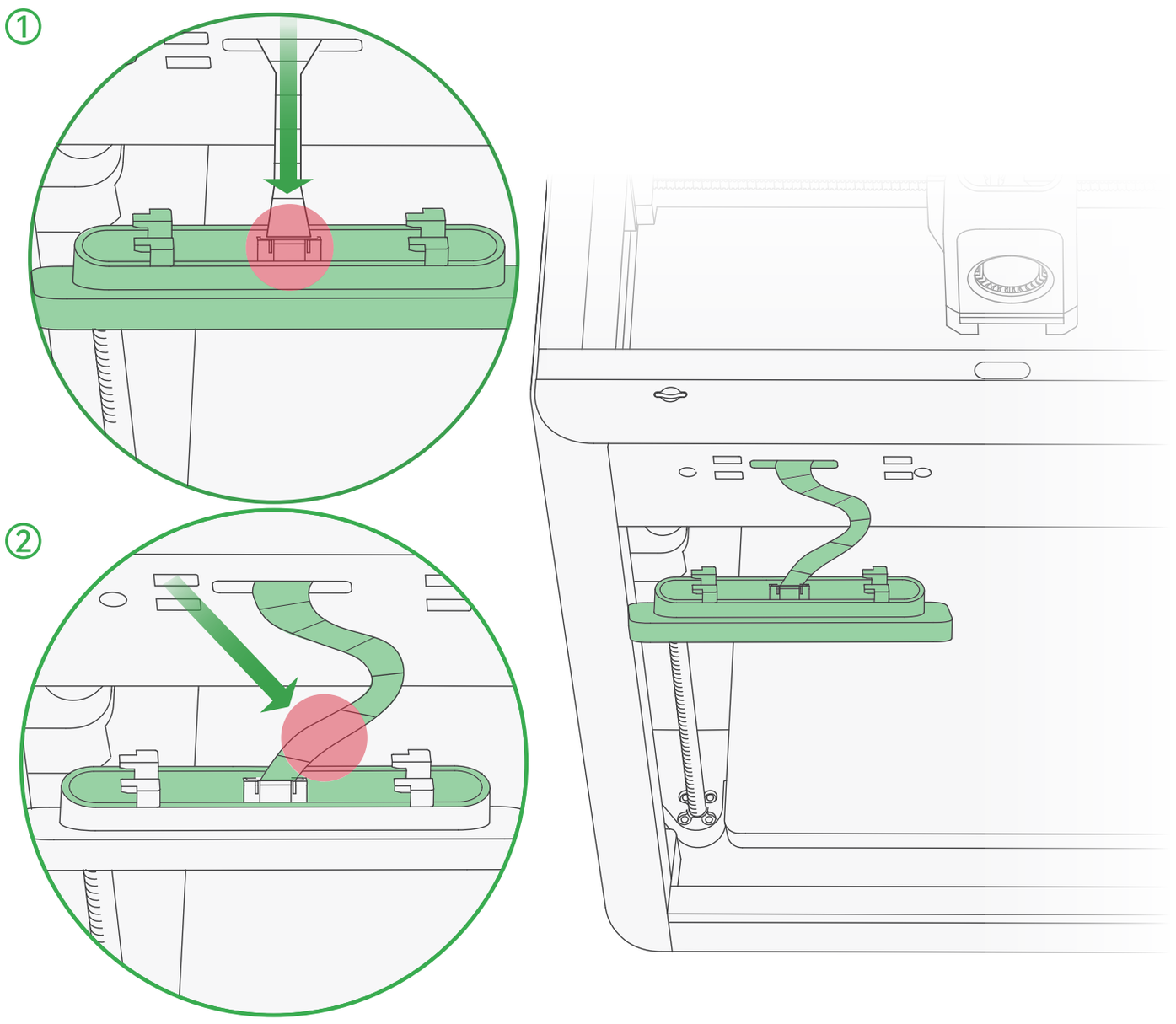

1. Plug the cable from the printer into the terminal of the screen.
2. Gently bend and push the cable into the opening on the back of the screen.

Install screen

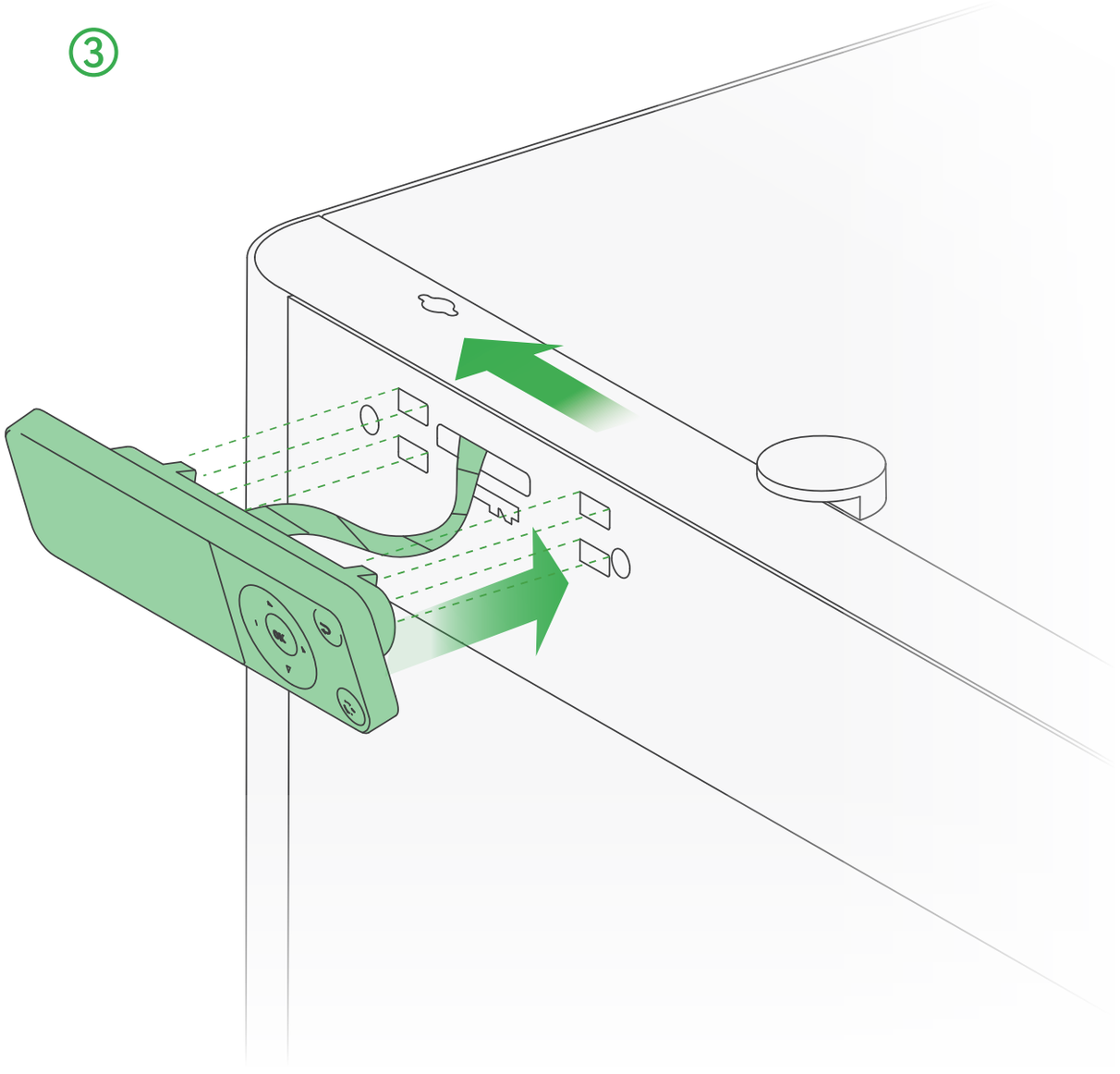

3. Insert the screen and slide left to lock it in place.

Bind the printer - Bambu Handy

1. Scan the QR code on the right to download Bambu Handy. Register and log in to your Bambu Lab account.
2. Follow the instructions on the screen until a QR code appears.
3. Scan the QR code on Bambu Handy to bind the printer to your Bambu Lab account.





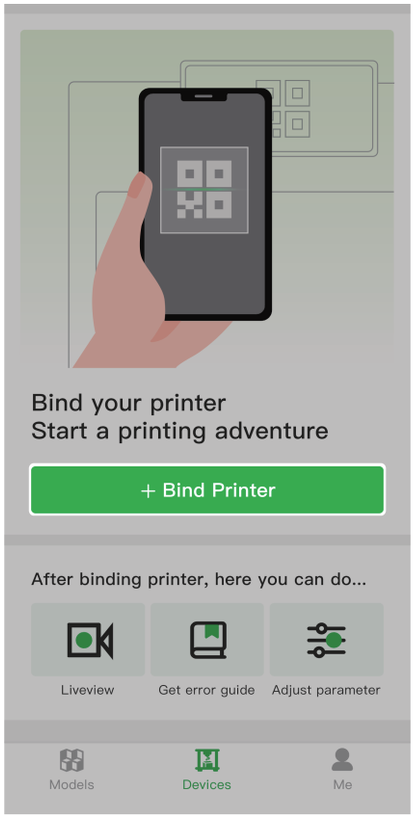

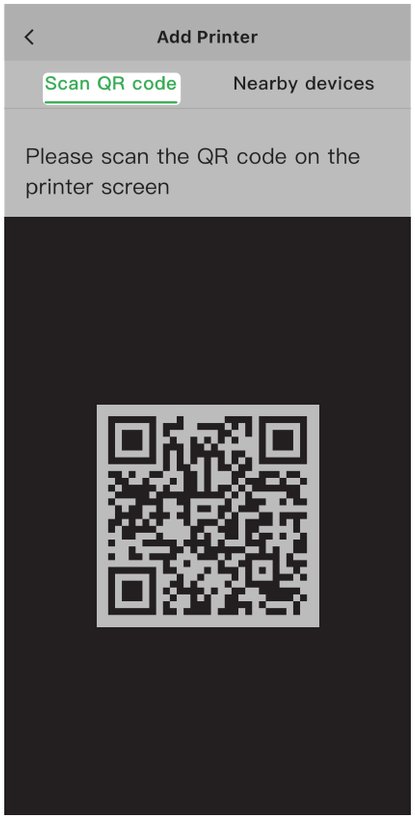

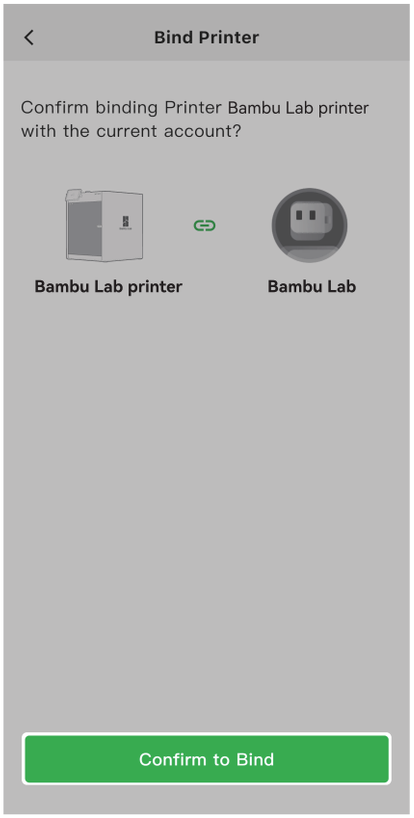

4. Follow the instructions on the screen to complete the initial calibration. It is normal to have vibration and noise during the process.
   * DO NOT remove the foam under the heatbed until calibration is complete.

Bind the printer - Bambu Studio

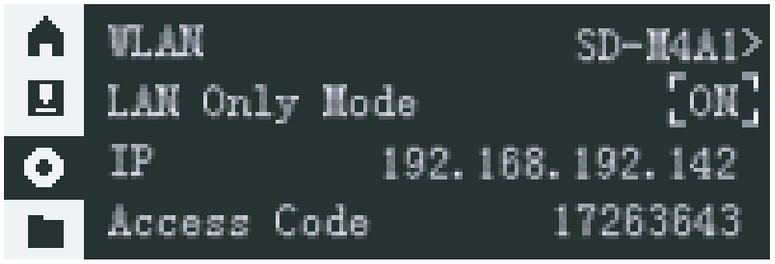

1. Connect both the computer and printer to the **same wireless network**, and do not use a **guest network** that has network device separation enabled.

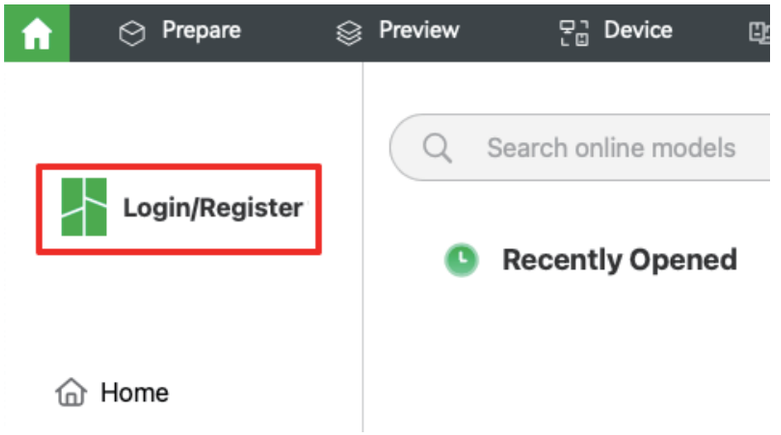

2. Visit the link below to download and install Bambu Studio. Register and log in to your Bambu Lab account.
bambulab.com/download/studio

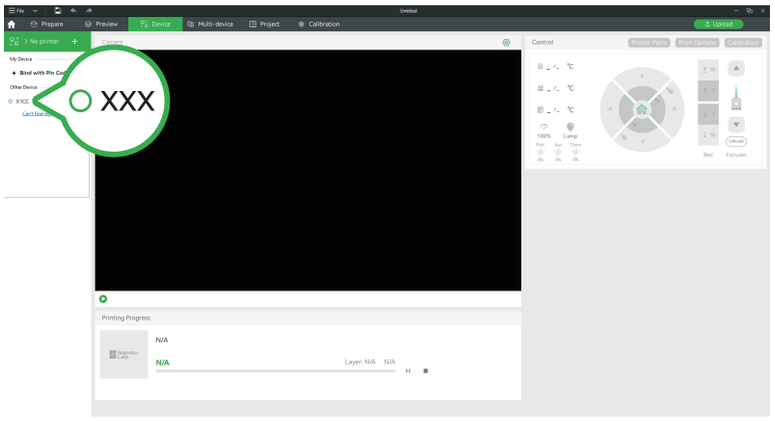

3. Click “+” on the device page, and Bambu Studio automatically discovers printers on the same network. Click the detected printer to bind it to your Bambu Lab account.

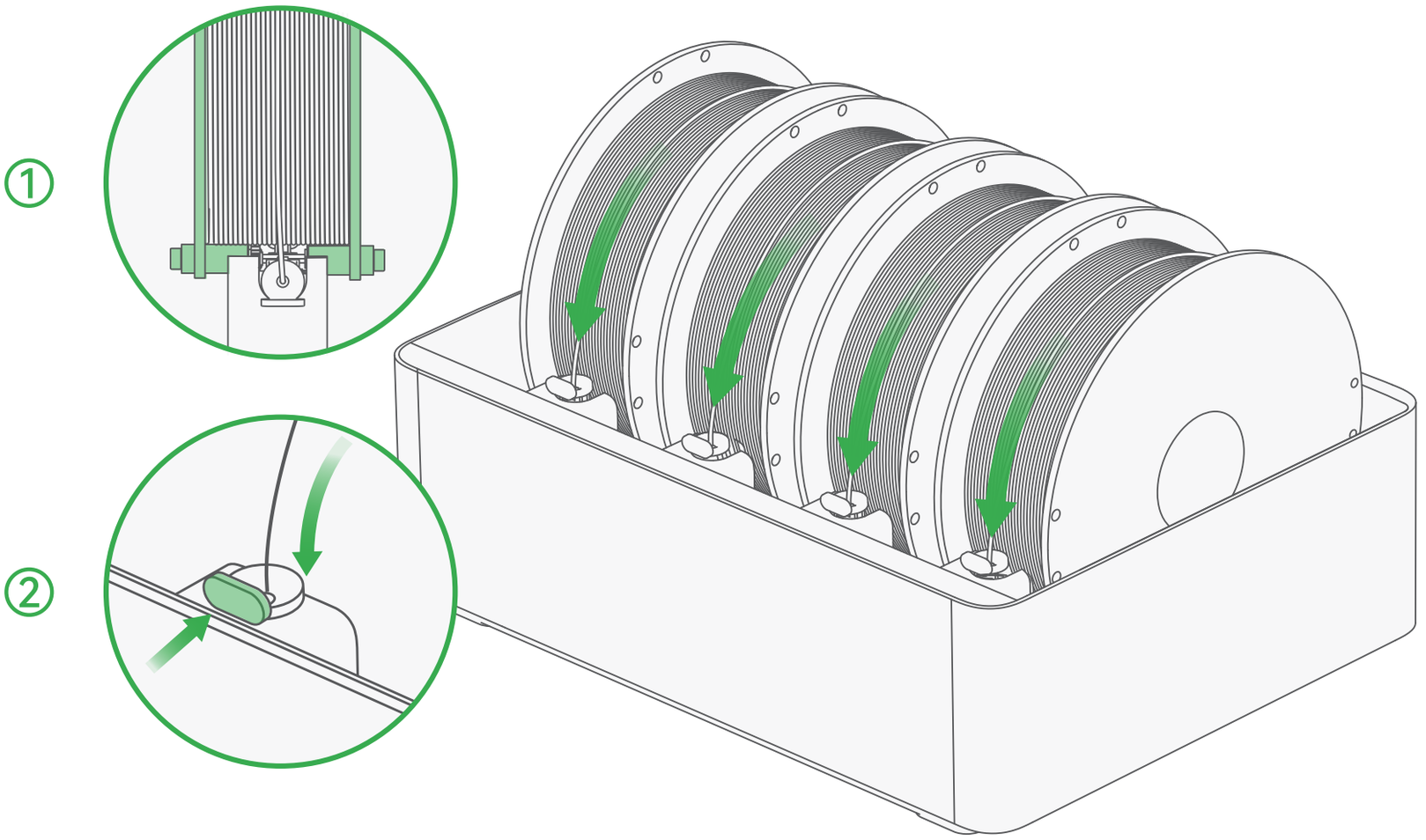

1. Power on the printer and place a spool of filament in any of the four slots. Make sure the spool is correctly placed on the active support shaft as shown in the picture.
2. Push the feeder tab towards the spool, and insert the filament. The AMS 2 Pro will pre-load it after it is detected. When the feeder LED light under the filament inlet is on, the AMS 2 Pro is ready to print.

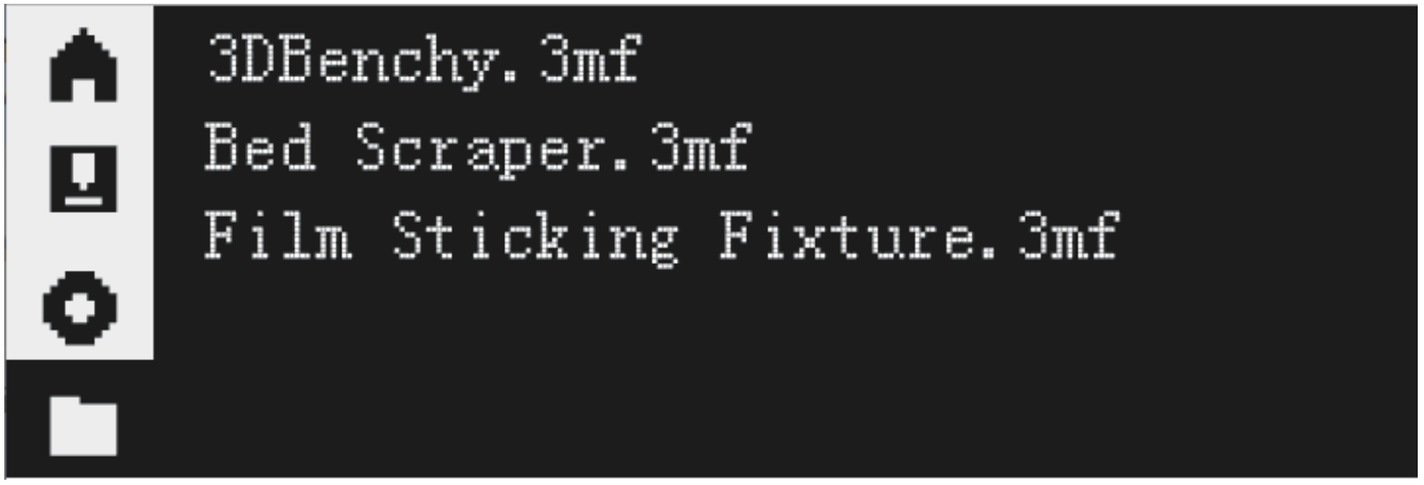

3. Select , and then choose a model you wish to print.

Printer specifications

Item		Specification
Printing Technology		Fused Deposition Modeling
Body	Build Volume (W×D×H)	256*256*256 mm^3
	Chassis	Steel
	Shell	Plastic and Glass
Toolhead	Hotend	All-metal
	Extruder Gears	Steel
	Nozzle	Stainless Steel
	Max Hotend Temperature	300 °C
	Nozzle Diameter (Included)	0.4 mm
	Nozzle Diameter (Optional)	0.2 mm, 0.6 mm, 0.8 mm
	Filament Cutter	Yes
	Filament Diameter	1.75 mm
Heatbed	Compatible Build Plate	Bambu Textured PEI Plate Bambu Smooth PEI Plate
	Max Heatbed Temperature	100 °C
Speed	Max Speed of Toolhead	500 mm/s
	Max Acceleration of Toolhead	20,000 mm/s^2
	Max Hotend Flow	32 mm^3/s @ABS (Model: 150*150 mm single wall; Material: Bambu ABS; Temperature: 280 °C)

Printer specifications

Item		Specification
Cooling	Part Cooling Fan	Closed Loop Control
	Hotend Fan	Closed Loop Control
	Control Board Fan	Closed Loop Control
	Chamber Temperature Regulator Fan	Closed Loop Control
	Auxiliary Part Cooling Fan	Closed Loop Control
	Air Filter	Activated Carbon Filter
Supported Filament	PLA, PETG, TPU, ABS, ASA, PVA, PET	Ideal
	PA, PC	Capable
	Carbon/Glass Fiber Reinforced Polymer	Not Recommended
Sensors	Chamber Monitoring Camera	Low Rate Camera 1280*720 0.5 fps Timelapse Supported
	Filament Run Out Sensor	Yes
	Filament Odometry	Optional with AMS
	Power Loss Recovery	Yes
Physical Dimensions	Dimensions (W×D×H)	389*389*458 mm^3
	Net Weight	12.95 kg
Electrical Parameters	Input Voltage	100-240 VAC, 50/60 Hz
	Max Power	1000 W@220 V, 350 W@110 V
	USB Output Power	5 V/1.5 A

Printer specifications

Item		Specification
Electronics	Display	2.7-inch 192*64 Screen
	Connectivity	Wi-Fi, Bluetooth, Bambu-Bus
	Storage	Micro SD Card
	Control Interface	Button, APP, PC Application
	Motion Controller	Dual-Core Cortex M4
Software	Slicer	Bambu Studio Support third party slicers which export standard G-code such as SuperSlicer, PrusaSlicer and Cura, but certain advanced features may not be support-ed.
	Slicer Supported OS	MacOS, Windows, Linux
Wi-Fi	Frequency Range	• 2412 MHz - 2472 MHz (CE) • 2412 MHz - 2462 MHz (FCC) • 2400 MHz - 2483.5 MHz (SRRC)
	Transmitter Power (EIRP)	• ≤ 21.5 dBm (FCC) • ≤ 20 dBm (CE/SRRC)
	Protocol	IEEE 802.11 b/g/n
Bluetooth	Frequency Band	• 2402 MHz-2480 MHz (CE/FCC) • 2400 MHz-2483.5 MHz (SRRC)
	Transmitter Power (EIRP)	• ≤ 20 dBm (FCC/SRRC) • ≤ 10 dBm (CE)
	Protocol	BLE5.0

AMS 2 Pro specifications

Item		Specification
Body	Dimensions	372*280*226 mm^3
	Net Weight	2.5 kg
	Housing Material	ABS/PC
Printing	Filament Supported	PLA, PETG, ABS, ASA, PET, PA, PC, PVA (dried), BVOH (dried), PP, POM, HIPS, Bambu PLA-CF/PAHT-CF/PETG-CF/Support for PLA/PETG, and TPU for AMS
	Filament Not Supported	TPE, generic TPU, PVA (damp), BVOH (damp), Bambu PET-CF/TPU 95A, and other filament that contains carbon fiber or glass fiber
	Filament Diameter	1.75 mm
	Spool Dimension	Width: 50 mm–68 mm Diameter: 197 mm–202 mm
	RFID Identification	Supported
Drying	Highest Temperature	65 °C
	Filament Supported	PLA, PETG, Support for PLA/PETG, ABS*, ASA*, PET*, PA*, PC*, PVA*, BVOH *, PP, POM*, HIPS*, Bambu PLA-CF*/ PAHT-CF*/ PETG-CF*, and TPU for AMS*
	Active Moisture Discharge	Supported
	Sealed Storage	Supported
	Temperature and Humidity Detection and Maintenance	Supported. Real-time temperature and humidity can be displayed on the screen, Bambu Studio, and Bambu Handy.
Power	Input	24 V 4 A

* Filaments marked with "*" require higher drying temperature. The AMS 2 Pro cannot dry them completely. If you want better drying performance for these filaments, we recommend purchasing an AMS HT.

Technical support

If you need technical support, please follow either of the following methods:

Method 1: You can also visit the Bambu Lab Wiki for more tutorials and maintenance guidance.
wiki.bambulab.com/home

Bambu Lab Wiki

Method 2: Get in touch by using one of the ways from the Contact Us section in our Support Center.
bambulab.com/support

Bambu Lab Support Center

Method 3: Create a support ticket on Bambu Handy, from the Support Center section.

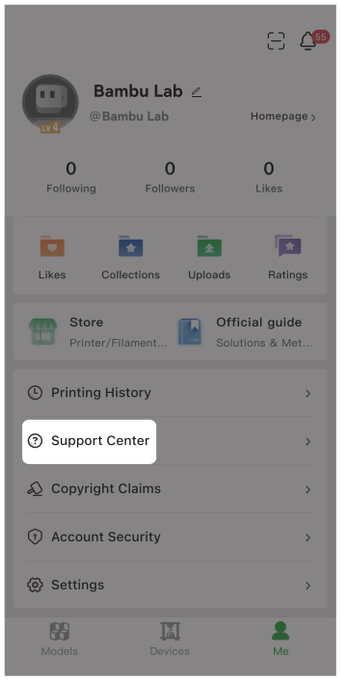

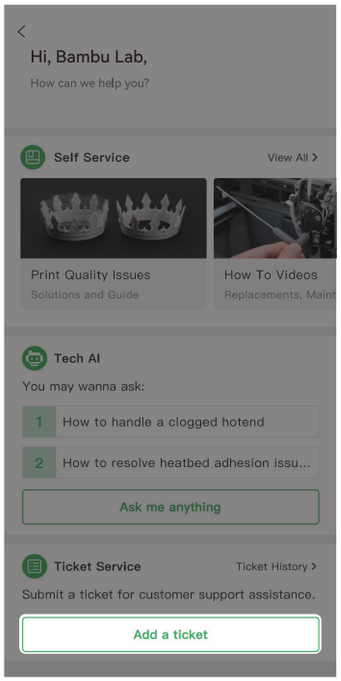

A00354-01

Bambu Lab

www.bambulab.com