WENRUN OPTOELECTRONIC CO., LTD.

Technical Data Sheet

LED DISPLAYS

• **Customer:**

Technical Data Sheet

PN: LDD080□□□-10-□□□-□□□

For: IF=20mA

Contents

1.Features
2.Descriptions
3.Applications
4.Selection guide
5.Absolute maximum rating
6.Electrical optical characteristics
7.Package dimensions
8.Internal circuit
9. Reliability
10.Typical electro-optical characteristics curves
11.Notes

Customer confirm	Approved by	Checked by	Issued by

Jiangsu Wenrun Optoelectronic Co.,Ltd.
No.88 Weiyi Road Dingmao Development Zone Zhenjiang
Tel: 0511-85510030 Fax：0511-85512861

WENRUN OPTOELECTRONIC CO., LTD.
Technical Data Sheet
LED DISPLAYS

◆ Features:

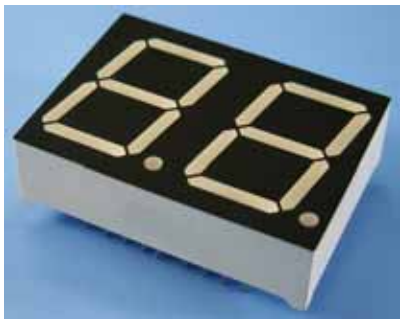

- High efficiency, low power consumption.
- Extremely low current.
- Luminous evenly distributed on each segment.
- Low development cost.

◆ Descriptions:

- Industrial standard size.
- These display provide excellent reliability in bright ambient light.
- These devices are made with white segments and black surface.

◆ Applications:

- Audio equipment or Instrument panels.
- General use for digital indicators.
- Multimedia product.

◆ Selection Guide:

Part No.		Chip		Lens Color
Anode	Cathode	Material	Emitting Color	
LDD080□B/DSR-10-□□□-□□□	LDD080 □ A/CSR-10-□□□-□□□	GaAlAs	Super Red	White Diffused
LDD080 □ B/DG-10-□□□-□□□	LDD080 □ A/CG-10-□□□-□□□	GaP	Green	
LDD080 □ B/DY-10-□□□-□□□	LDD080 □ A/CY-10-□□□-□□□	GaAsP/GaP	Yellow	

◆ Absolute Maximum Rating （Ta=25℃）

Parameter	Symbol	Super Red	Green	Yellow	Unit
Power Dissipation/Segment	P_d	60	60	60	mW
Peak Forward Current /Segment (Duty 1/10@ 1KHz)	I_{FP}	70	70	70	mA
Continuous Forward Current /Segment ①	I_F	20	20	20	mA
Recommend use current /Segment ②	I_F	5~10	5~10	5~10	mA
Reverse Voltage /Segment	V_R	5	5	5	V
Operating Temperature Range	Topr	-40~ +85			℃
Storage Temperature Range	Tstg	-40 ~ +85			℃
Solder Temperature ③	Tsol	260±5			℃

Notes：1、This is the limit current . It is not allowed to use when the product work continuously.
2、It is recommended that the product is driven by TTL,CMOS.
3、Soldering time≤5 seconds.
4、I_{FP} condition: pulse width ≤1ms ,duty cycle ≤1/10

◆ Electrical Optical Characteristics（Ta=25℃）

Parameter	Symbol	Super Red		Green		Yellow		Unit	Test Condition
		Typ.	Max.	Typ.	Max.	Typ.	Max.		
Luminous Intensity /Segment	I_V	9.0	--	4.5	--	4.5	--	mcd	I_F=10mA
Forward Voltage /Segment	V_F	1.85	2.3	2.2	2.5	2.0	2.5	V	I_F=20mA
Reverse Current /Segment	I_R	--	50	--	50	--	50	uA	V_R=5V
Dominant Wavelength	λd	645	--	565	--	585	--	nm	I_F=20mA
Spectral Line Half Width	Δλ	20	--	20	--	20	--	nm	I_F=20mA

◆ Package Dimensions:

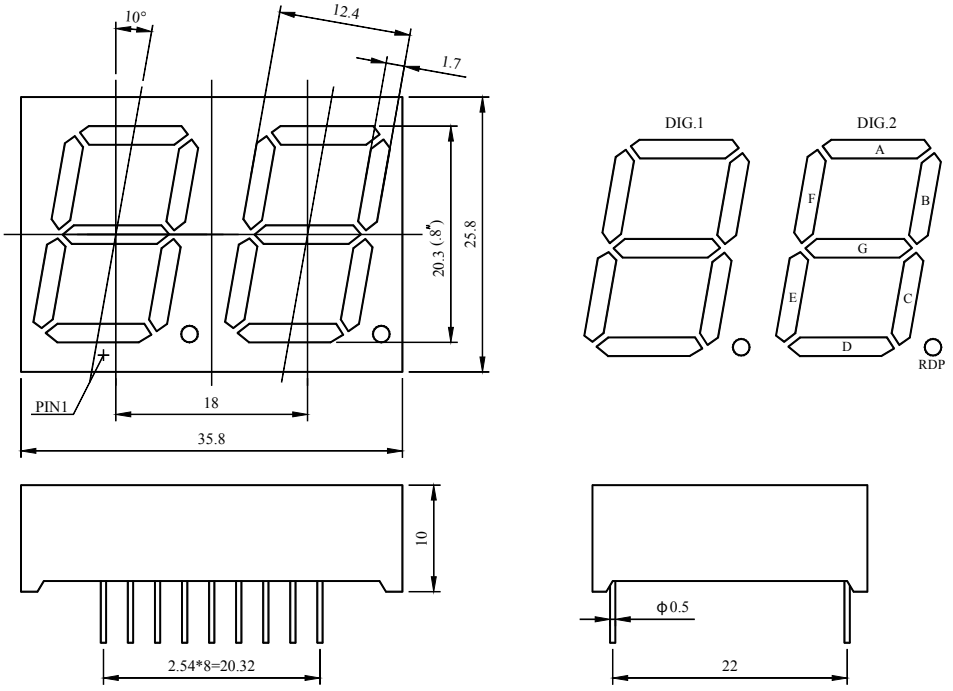

NOTES：

- All dimensions are in millimetres (mm), Tolerance is ±0.25mm unless otherwise noted.
- Specifications are subject to change without notice.

◆ Internal Circuit:

Common Cathode

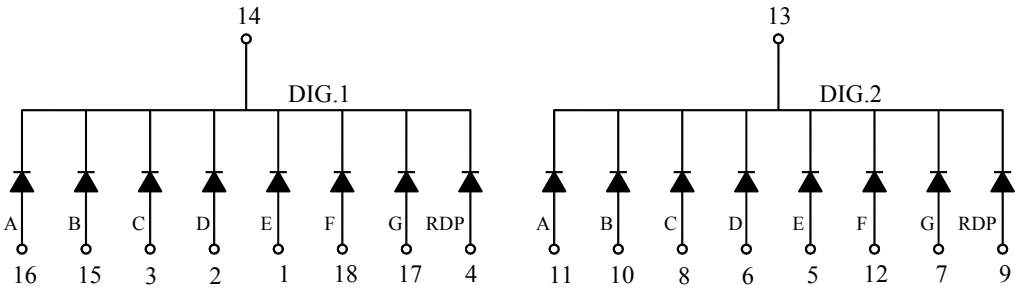

LDD080□A□-10-□□□-□□□

Common Anode

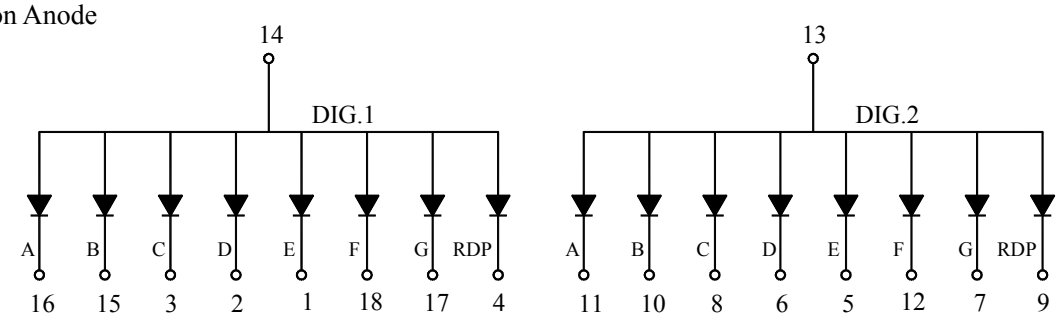

LDD080□B□-10-□□□-□□□

◆ Package Dimensions:

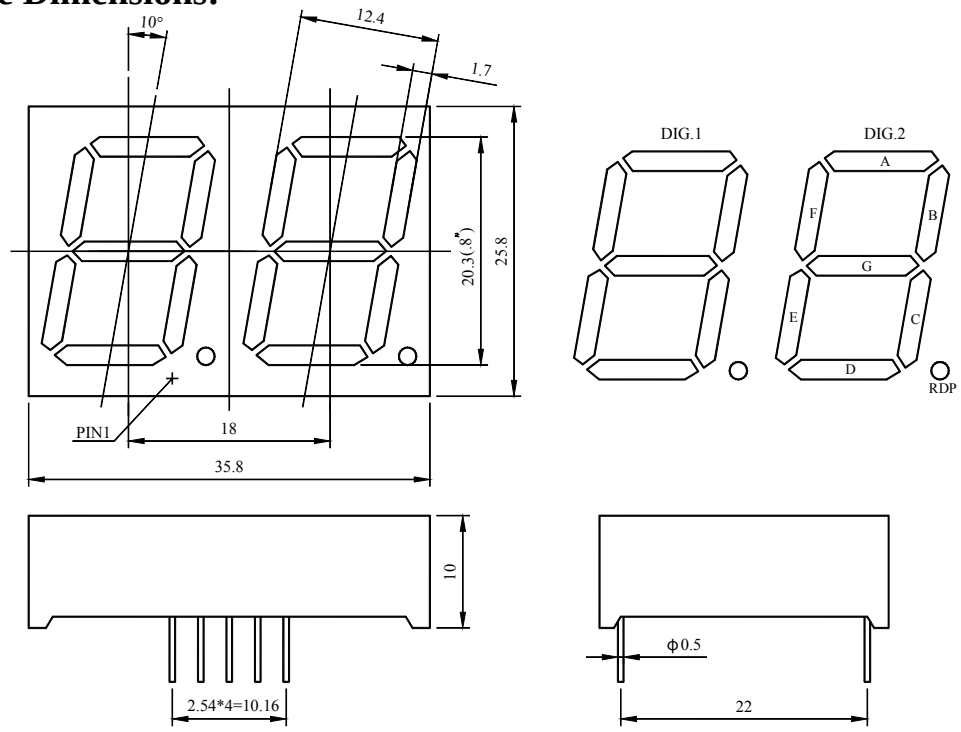

NOTES：

- All dimensions are in millimetres (mm), Tolerance is ±0.25mm unless otherwise noted.
- Specifications are subject to change without notice.

◆ Internal Circuit:

Common Cathode

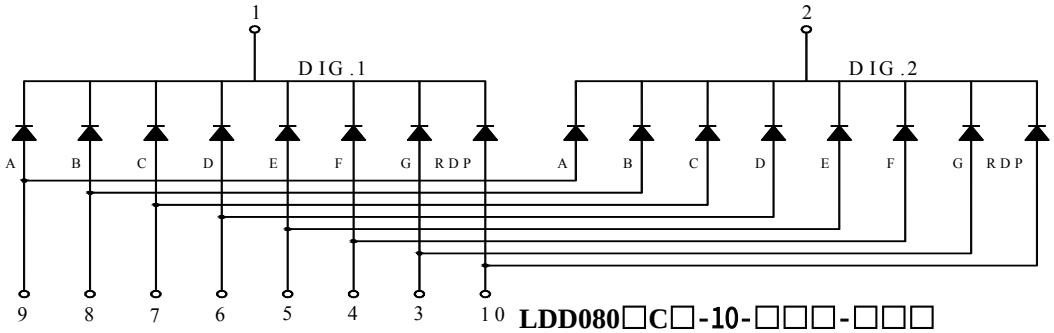

LDD080□C□-10-□□□-□□□

Common Anode

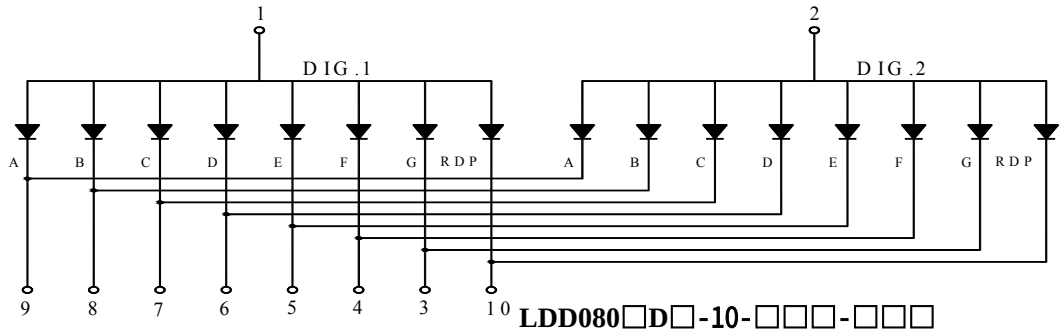

LDD080□D□-10-□□□-□□□

◆ Reliability

(1) Test Items and Conditions

NO	Test Item	Test Conditions	Sample	Ac/ Re
1	Temperature Cycle	-40±5℃→25±5℃→100±5℃→25±5℃ (30min，5min，30min，5min) 20 Cycles	20	0/1
2	High Temperature Storage	Ta：100±5℃ Test time=1000HRS(-24HRS,+72HRS)	20	0/1
3	High Temperature And High Humidity Working	Ta：85±5℃，RH:85±5%，IF=10mA/seg Test time=500HRS(-24HRS,+72HRS)	20	0/1
4	Low Temperature Storage	Ta：-40±5℃ Test time=1000HRS(-24HRS,+72HRS)	20	0/1
5	Operating Life Test	Connect with a power IF=10mA/seg Ta=Under room temperature Test time=1000HRS(-24HRS,+72HRS)	20	0/1
6	Solder Resistance	T.Sol=260±5℃ one time Dwell Time=5±1Secs，distance 3mm	20	0/1
7	Thermal Shock	-40±5℃→100±5℃ (15min，15min) 20Cycles	20	0/1

(2)Criteria of judging the damage

Item	Symbol	Test condition	Criteria for judgement	
			Min.	Max.
Forward voltage	VF	IF=10mA/Seg	/	U.S.L*1.1
Reverse current	IR	VR=5V	/	15uA
Luminous intensity	IV	IF=10mA/Seg	L.S.L*0.7	/
Wave length	λ D/ λ P	IF=10mA/Seg	/	U.S.L±2nm
Appearance	/	View check	No mechanical damage	

* U.S.L: Upper standard level L.S.L: Lower standard level

◆ Typical Electro-Optical Characteristics Curves

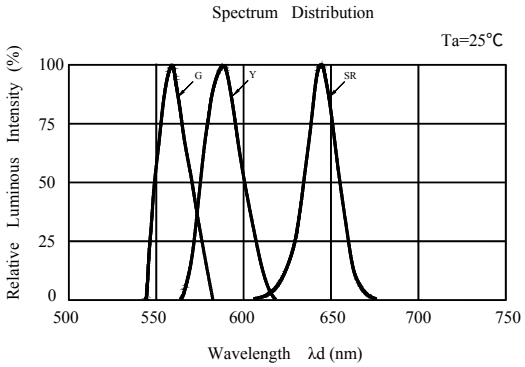

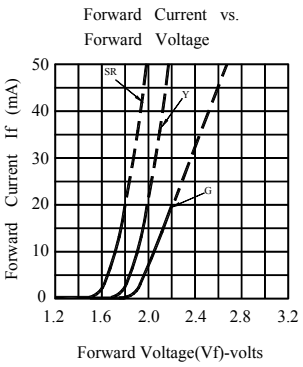

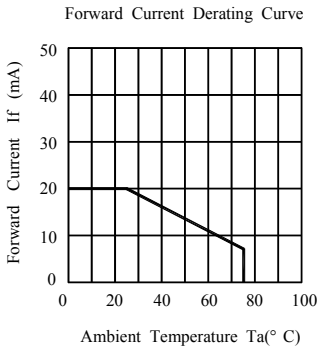

◆ Notes:

1、Above specification may be changed without notice. We will reserve authority on material change for above specification.

2、When use this product, please observe the absolute maximum ratings and the instructions for the specification sheets. We assume no responsibility for any damage resulting from using of the product which does not comply with the instructions included in the specification sheets.