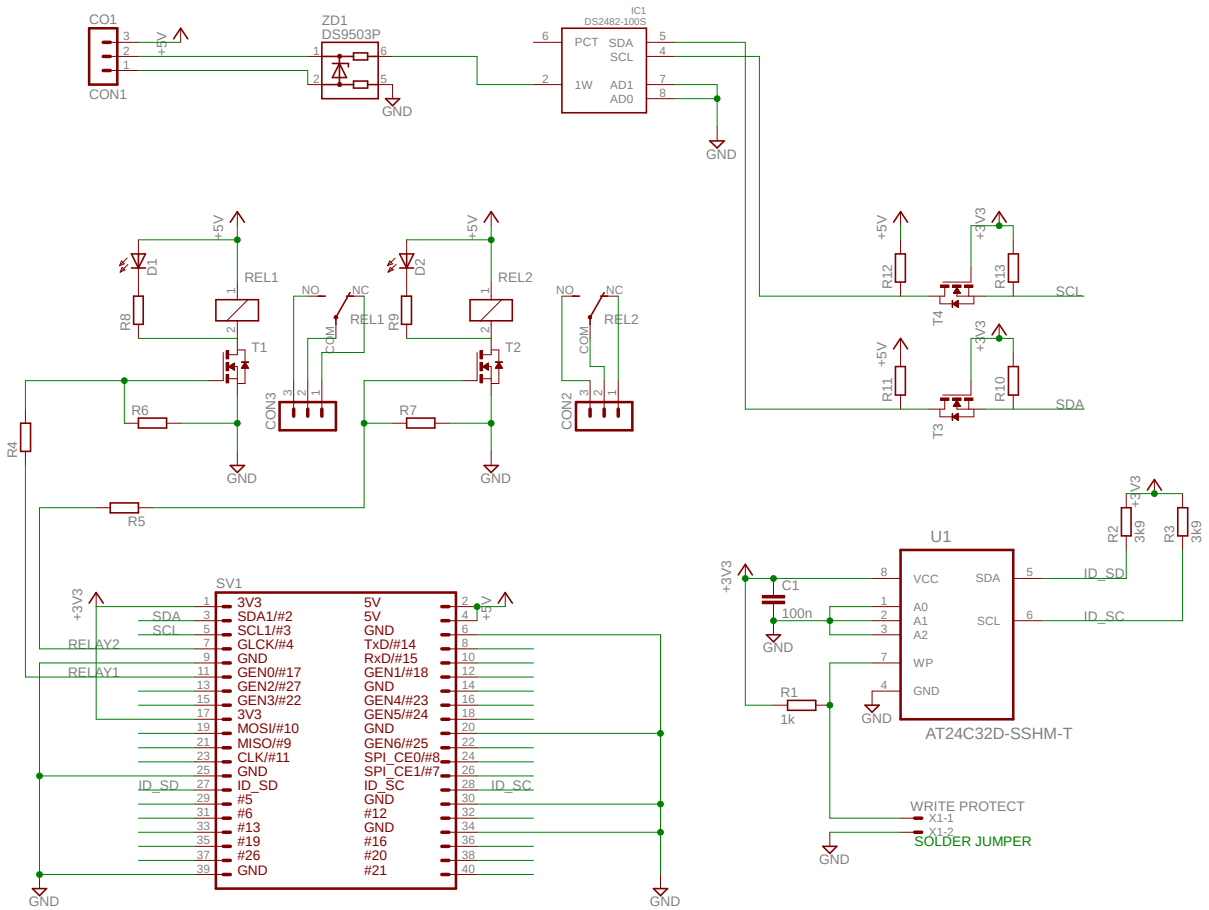


| | |
|---|---|
| | MSX Elektronika |
| | 2Relay_Hat |
| | 2015-08-26 14:51:33 |
| | Sheet: 1/1 |